Copyright © Alumax Bath Enclosures 2005. All rights reserved.

PANEL GLAZING VINYL		
GLASS THICKNESS	VERTICAL	HORIZONTAL
1/4"	V–219	V–220
3/16"	V–226	V–225

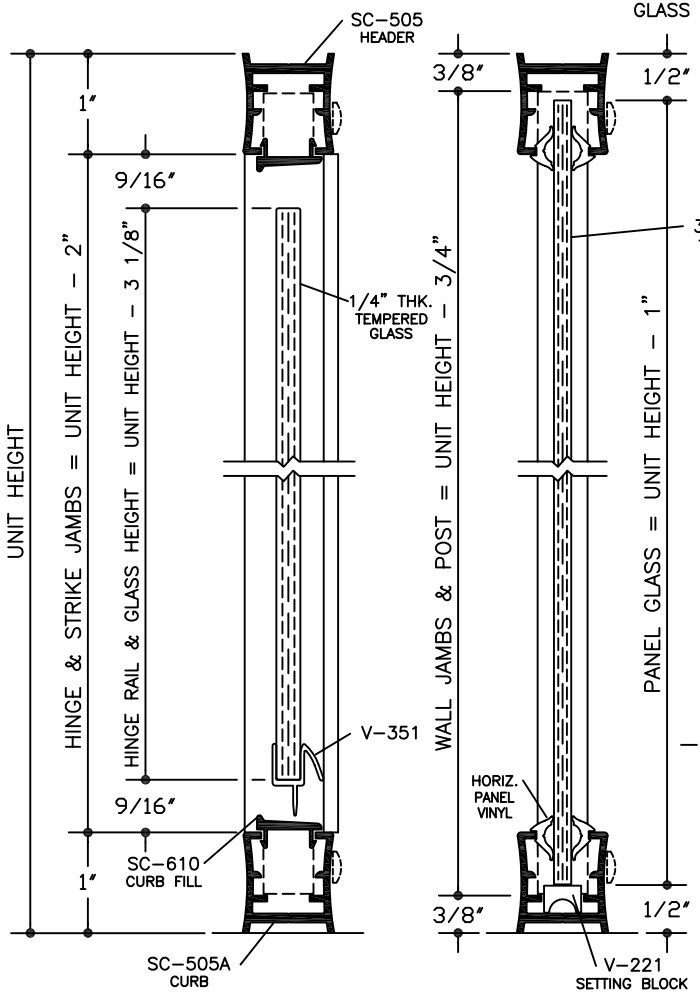

VERTICAL CROSS SECTION

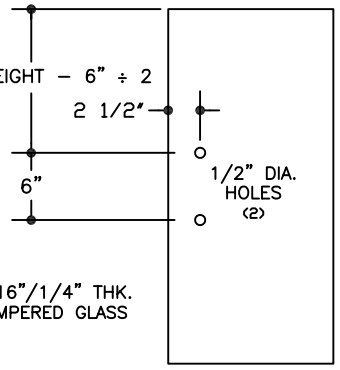

DOOR GLASS DETAIL

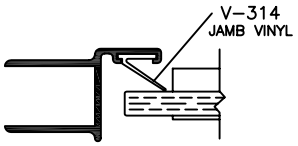

STRIKE JAMB DETAIL
ABOVE & BELOW MAGNET

NOTES:

1. Panel 1/2" glass bite may vary up to +3/16" / –1/4" as necessary to facilitate the use of standard glass sizes or to configure for out–of–plumb or out–of–square conditions.
2. The 4033 strike jamb magnet (4" long) should be centered in the jamb with V–314 jamb seal vinyl above and below it (see detail).
3. Fractional dimensions rounded to the nearest 1/16". Actual unit sizes may vary up to 1/8" due to rounding or use of standard glass sizes.

✱ 4. Application of tolerances may affect glass and horizontal frame member sizes.

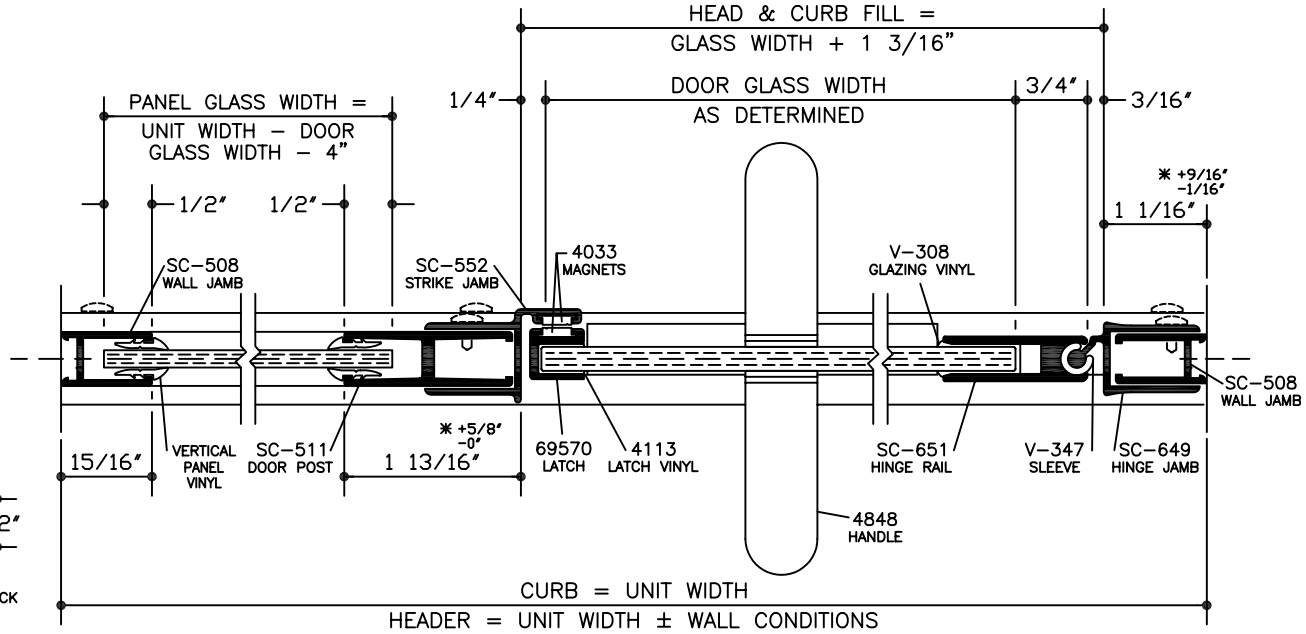

HORIZONTAL CROSS SECTION

1/2 SIZE DETAIL

NOTE: Glazing material for all KD units and Glazed units must conform to Ansi Z97.1 and CPSC Standard 16 CFC 1201 Category I and II.

EPH–N00–06221
DATE: 3–15–05

SERIES

391cv

FRAMELESS CONTINUOUS HINGE

ALUMAX
BATH ENCLOSURES
a product of ALCOA
PO Box 40 - Magnolia, AR 71754-0040 - (870) 234-4260
www.alumaxbath.com