Copyright © Alumax Bath Enclosures 2000. All rights reserved.

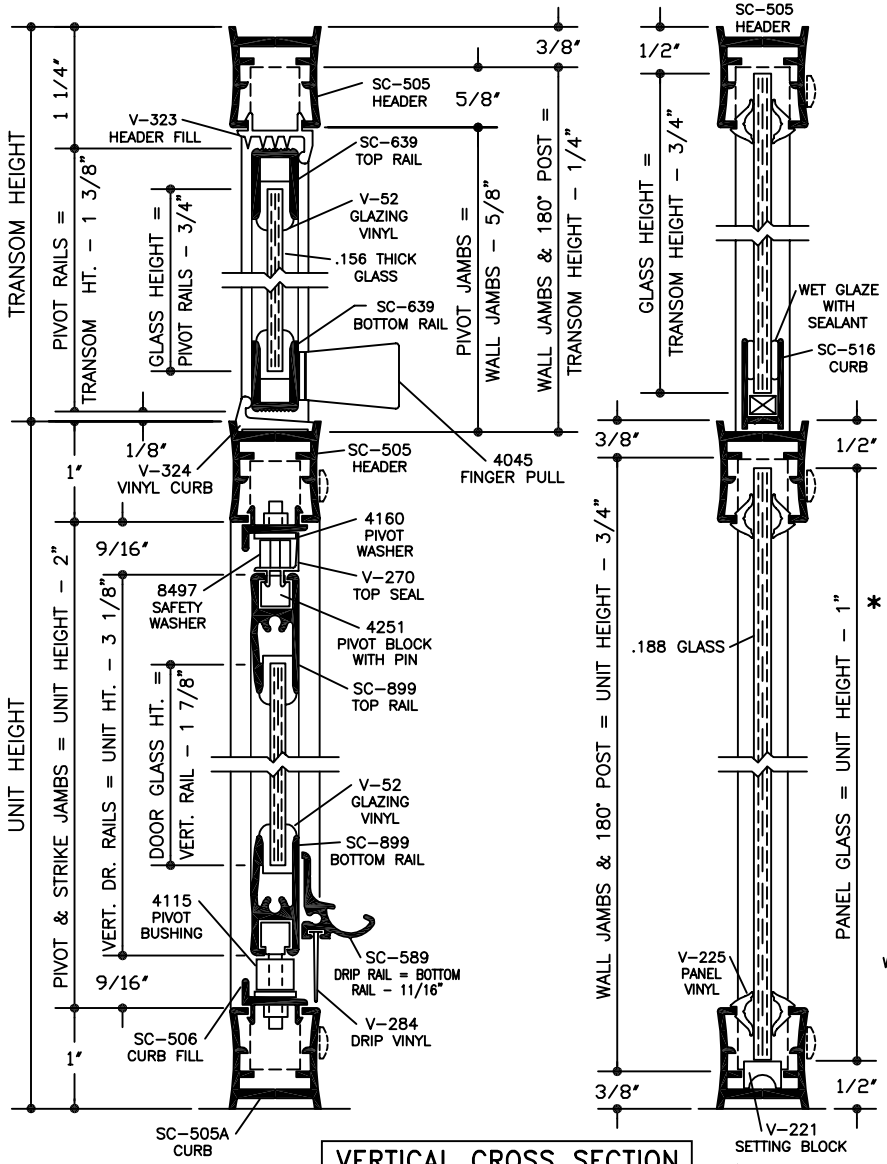

VERTICAL CROSS SECTION

1/2 SIZE DETAIL

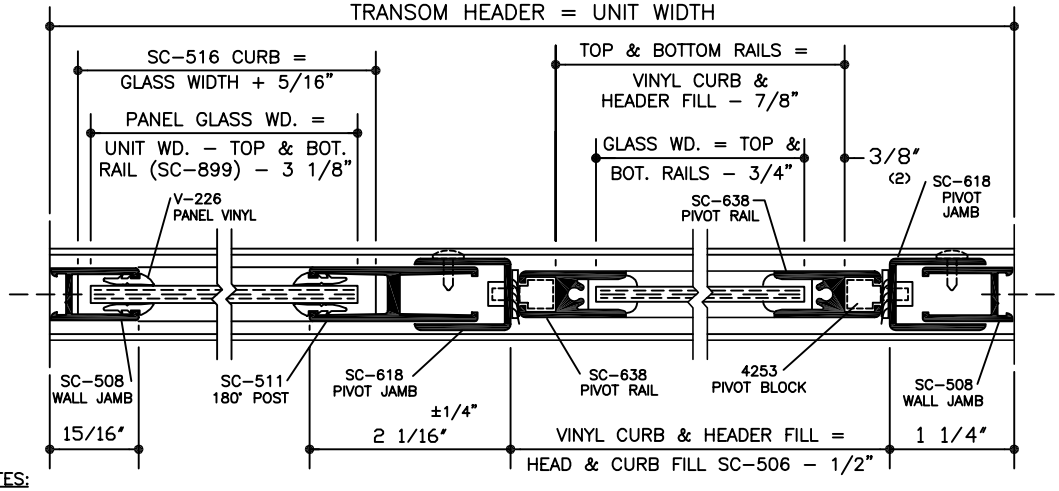

TRANSOM CROSS SECTION

NOTES:

1. Glass bite and overlap of vertical members may be altered to facilitate the use of standard glass sizes or for out-of-plumb wall conditions.
2. * KD door kits available for glass sizes of 22 3/8", 27 3/8" or 33 3/8" wide by 63 1/2" or 67" high. Other glass sizes may be substituted.

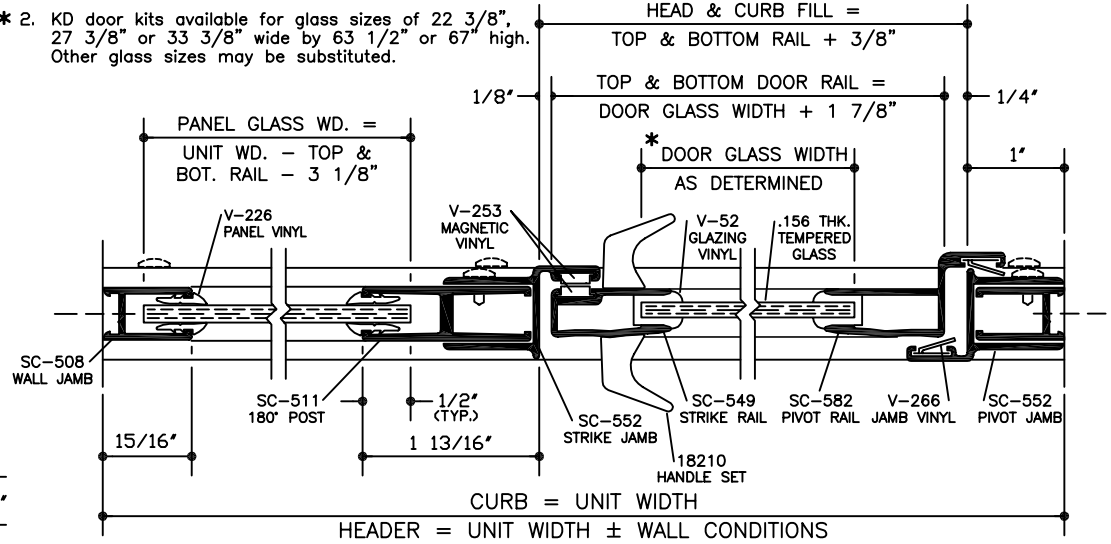

HORIZONTAL CROSS SECTION

NOTE: Glazing material for all KD units and Glazed units must conform to Ansi Z97.1 and CPSC Standard 16 CFC 1201 Category I and II.

X891TRANSOM.DWG
DATE: 9-24-01

SERIES	WIDTH x HEIGHT	DOOR GLASS SIZE	PANEL GLASS SIZE
891 STEAM STIKSTALL WITH TRANSOM	48" x 68 1/2" 60" x 72" GLAZED	22 3/8" x 63 1/2" 22 3/8" or 27 3/8" x 67" STANDARD SIZE	20 5/8" x 67 1/2" 32 5/8" or 27 5/8" x 71" STANDARD SIZE
	60" x 68 1/2" 60" x 72" KD	* See Note #2 * See Note #2 MAXIMUM SIZE	Custom x 67 1/2" Custom x 71" MAXIMUM SIZE

ALUMAX BATH ENCLOSURES
a product of ALCOA
PO Box 40 - Magnolia, AR 71754-0040 - (870) 234-4260