ALUMAX

BATH ENCLOSURES

An Alcoa Company ®

Tel: 800-643-1514
Fax: 870-234-3181
www.alumaxbath.com

INSTALLATION
INSTRUCTIONS

640 & 650 SERIES FRAMED BYPASS BATH ENCLOSURES

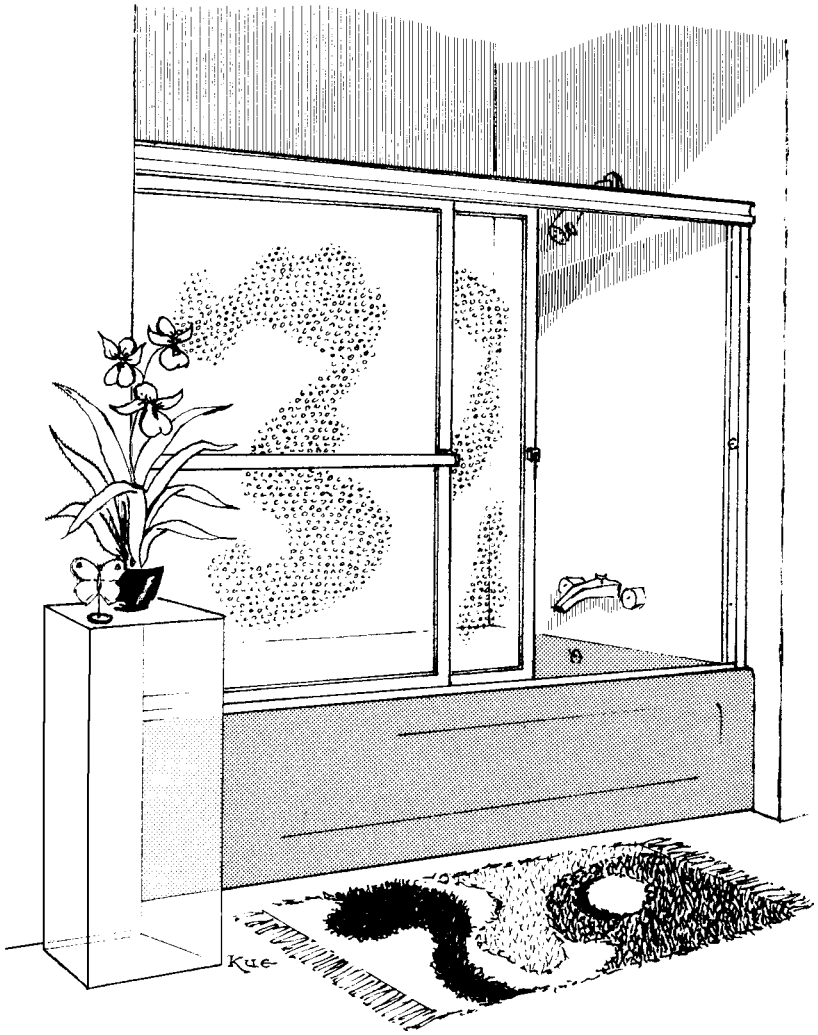

EPH-N00-06015
11-24-04

LIMITED WARRANTY AND REMEDY

ALUMAX BATH ENCLOSURES warrants to its dealers, customers, and all subsequent purchasers and users, that the products supplied by it shall be free from material defects in material and workmanship for a period of one (1) year after shipment, provided they are installed and maintained according to ALUMAX BATH ENCLOSURE's recommended practices and installation instructions. This warranty shall apply only to defects appearing within one (1) year from the date of shipment, and provided that ALUMAX BATH ENCLOSURES is promptly notified in writing of such defects. The sole and exclusive remedy with respect to the above warranty or with respect to any other claim relating to defects or any other condition or use of the products supplied by ALUMAX BATH ENCLOSURES, however caused, and whether such claim is based upon warranty contract, negligence, strict liability, or any other theory, is limited to repair or supply of such products, or repayment by ALUMAX BATH ENCLOSURES of the purchase price paid for it, at ALUMAX BATH ENCLOSURE's option.

ALUMAX BATH ENCLOSURES does not make any other representations or warranties, express or implied, including, but not limited to, any implied warranty of merchantability and any implied warranty of fitness for a particular purpose. In no event shall ALUMAX BATH ENCLOSURES be liable for special, direct, indirect, or consequential damages, including, but not limited to, loss or use of profits.

Dealers agree to pass on to its customers and users in writing ALUMAX BATH ENCLOSURE's Warranty and Remedy as set forth above.

Laws and building and safety codes governing the design and use of bath enclosures vary widely. ALUMAX BATH ENCLOSURES does not control the selection of product configurations, operating hardware or glazing materials, and assumes no responsibility therefor.

INSTALLATION NOTES

Unpack your unit carefully and inspect for freight damage. Lay out and identify all parts using the instruction sheets as a reference. Before discarding the carton, check for small hardware bags that tend to fall to the bottom of the box. If any parts are damaged or missing, refer to the descriptions noted in the instructions when contacting your dealer for replacements.

Handle glazed panels carefully and protect the edges. Safety tempered glass is very resistant to breakage, but the sharp corners of the panels can damage tile and floor coverings.

Please wear safety glasses whenever drilling or cutting. When drilling holes in ceramic tile or marble, use a center punch and hammer to carefully break the surface glaze so the drill can start without skidding.

To install your ALUMAX Bath Enclosure you will need the following: tape measure, level, #2 Phillips screwdriver, flat screwdriver, drill, 1/8", 7/64" and 3/16" drill bits, hacksaw, pencil, and caulking (clear silicone recommended). Optional tools include a miter box for cutting parts to length, files, center punch, and masking tape.

NOTE: Before beginning installation, check the tub rim for level and both walls for plumb. If either are off more than 1/4" to 3/8", you may want to contact your dealer for tapered fillers which can be used to level the tub track or plumb the wall jambs.

640/650 PARTS LIST

A. 1 Tub Track
B. 2 Wall Jambs
C. 6 Plastic Wall Anchors
D. 6 #8 x 1 1/2" Truss Head Screws
E. 2 Nylon Spacers
F. 1 Header
G. 2 Glazed Panels
H. 4 Nylon Roller Bearings
J. 4 #8-32 x 3/8" Hex Head Screws
K. 4 Towel Bar Trim Rings
L. 4 Towel Bar Brackets
M. 2 Towel Bars
N. 2 #10-24 x 7/8" Truss Head Screws
P. 2 #10-24 x 1 1/8" Flat Head Screws
R. 2 Acrylic Finger Pulls
S. 2 Alumax Decals
T. 1 Nylon Bottom Guide
U. 1 #6 x 3/8" Truss Head Screw
V. 2 Stainless Bumper Inserts
W. 2 Soft Jamb Bumpers
X. 1 Vinyl Silencer

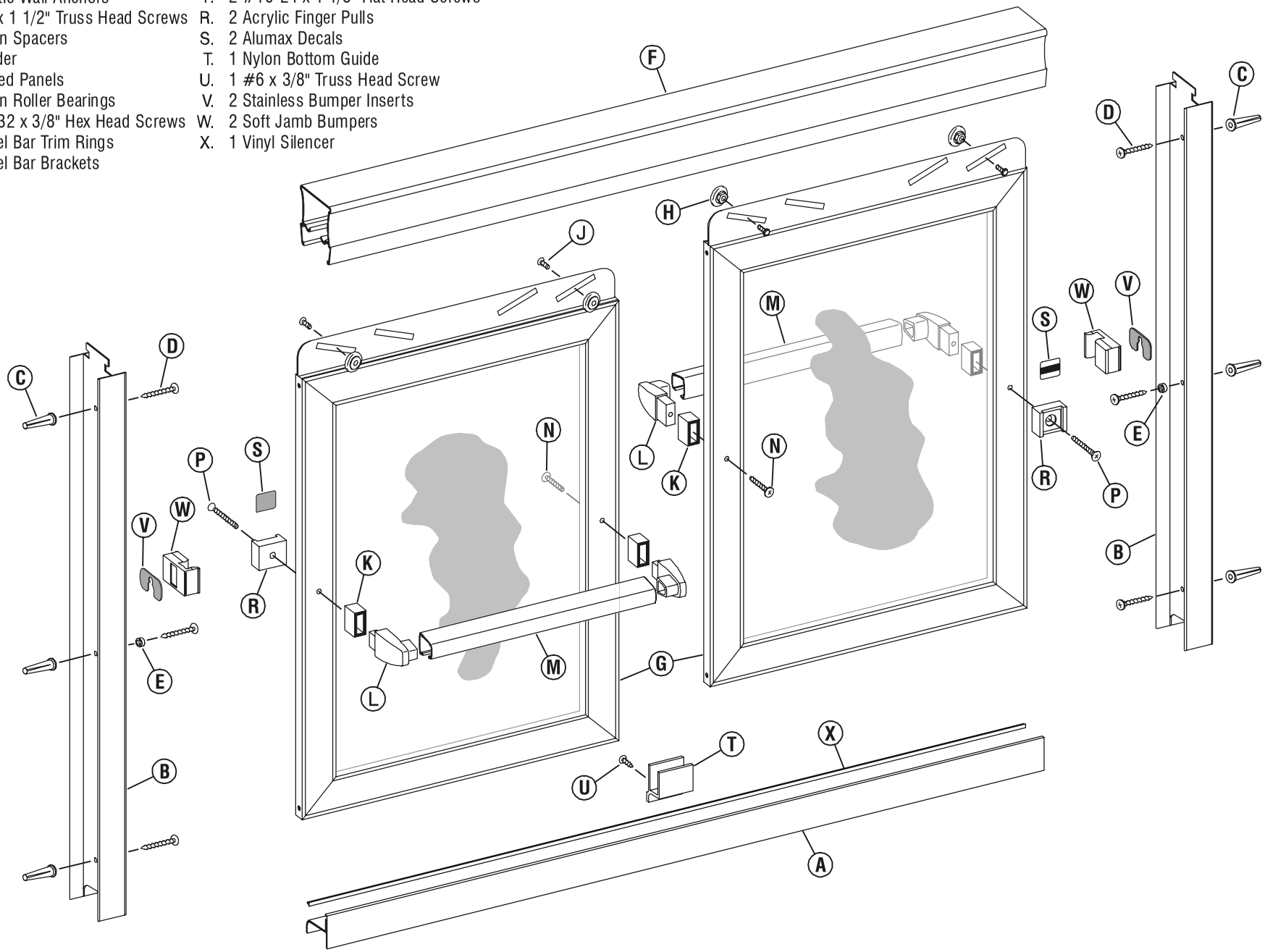

1

Measure the wall-to-wall opening at the center of the tub rim. Cut the tub track [**A**] 1/16" short of this dimension. An inexpensive miter box (available at your local hardware store) will help you get clean square cuts.

If the vinyl silencer (**X**) is separate from the tub track (**A**) slide the silencer into the slot in the tub track.

Position the tub track in the center of the tub rim with the tall leg to the exterior. It may be necessary to file a radius on the ends of the tub track and wall jambs to match the corners of the enclosure.

Press both wall jambs [**B**] into position over the tub track. Masking tape can be used to hold the parts in place temporarily.

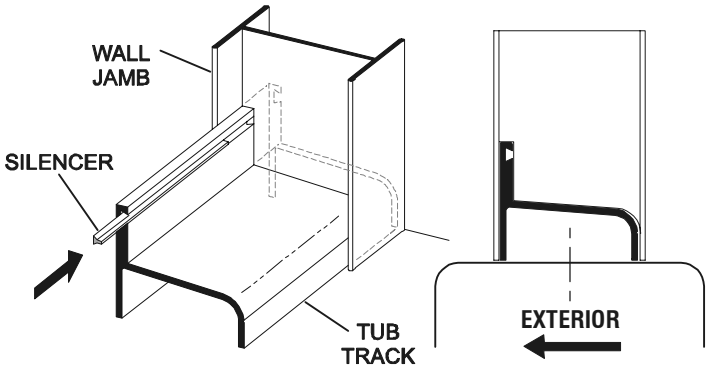

2

Use a level to plumb both wall jambs [**B**], then mark the pre-drilled hole locations on the wall. Lightly mark along both sides of the tub track [**A**] with a pencil, then remove all parts.

For tile or marble walls, drill six 3/16" diameter holes and insert the plastic wall anchors [**C**]. Attachments to fiberglass or acrylic units can be made in two ways. If a reinforcement is built into the wall of unit, drill six 1/8" holes to install mounting screws directly into the reinforcement. If walls are not reinforced, drill six 3/16" holes and install plastic wall anchors or toggle bolts (toggle bolts not supplied by ALUMAX).

CAUTION: The track should never be screwed to the tub. This will damage the tub and cause leakage.

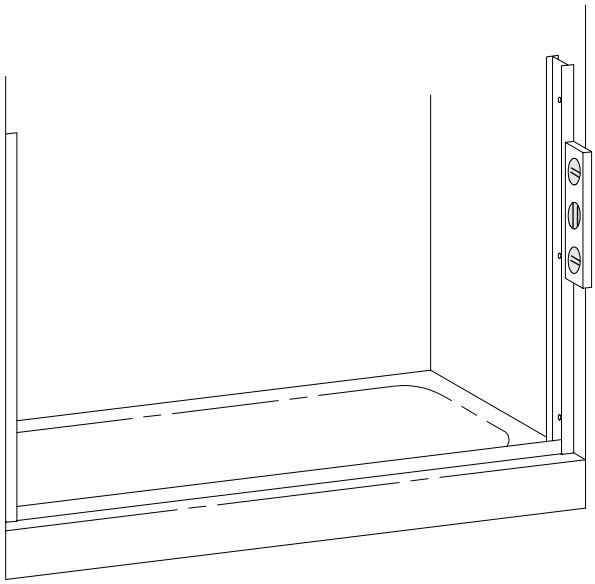

3

Before replacing the tub track [**A**], force a slight downward bow in the extrusion. This will ensure the track fits tight to the tub. Run two beads of caulk inside the penciled marks on the tub rim. Place the tub track in the exact position marked in Step **#2** and seat it firmly in the caulking.

NOTE: Improper caulking will result in leaks.

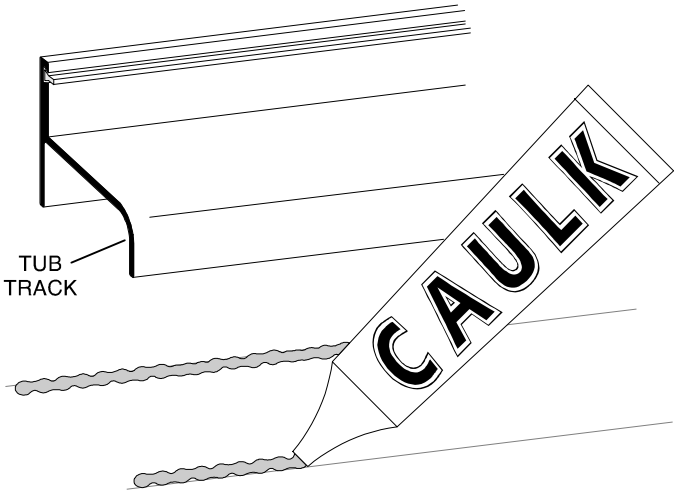

4

Replace one wall jamb [**B**] and attach to wall with two #8 x 1 1/2" truss head screws [**D**] inserted through the top and bottom holes. Slip a nylon spacer [**E**] over a #8 x 1 1/2" truss head screw and install in the center hole of the wall jamb. Check jamb for plumb and tighten screws.

NOTE: Do not overtighten the jamb screws.

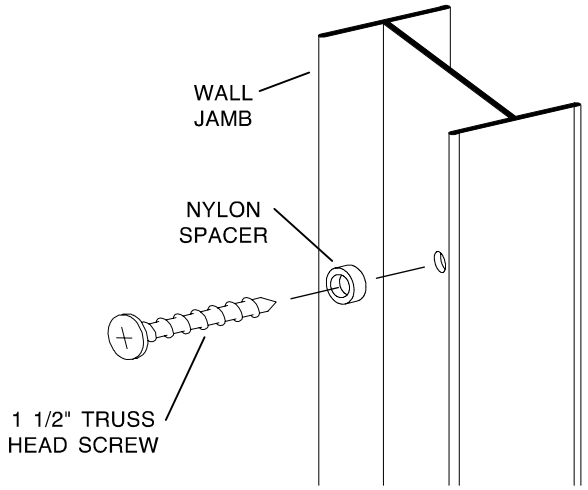

5

This bath enclosure is equipped with safety tee-lock wall jambs. When properly installed, the header is permanently locked to the wall jambs and cannot be accidentally dislodged.

Measure the wall-to-wall opening at the top of the wall jambs [**B**] and cut the header [**F**] 1/16" short of this dimension. Check the header for fit.

Slide the safety tee-lock of the unmounted wall jamb [**B**] into the end of the header. The header is reversible so that either face may be turned to the exterior of the unit. Holding the header at an angle, engage the other end onto the mounted wall jamb. Pivot the header into place, then slide the loose wall jamb to the wall and press into position on the tub track. Attach the jamb to the wall per instructions in Step **#4**.

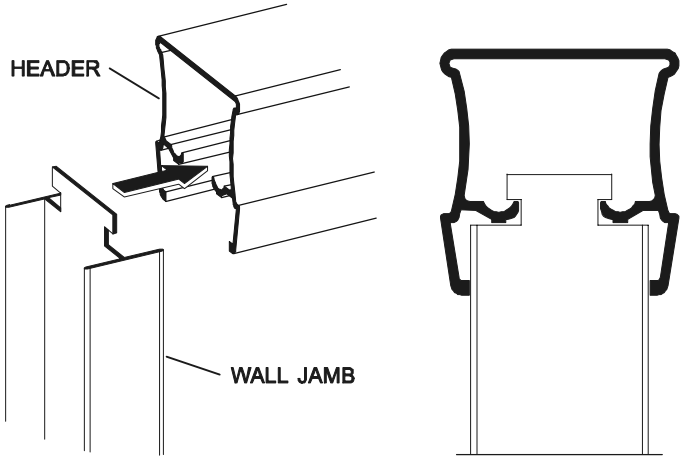

6

NOTE: Obscure glass doors should be installed with the rough surface of the glass to the exterior of the unit. Deco or etched glass doors should be installed with the patterned surface to the inside.

On doors with obscure or etched glass, there is an interior and exterior glazed door panel [**G**] as determined by the position of the top bearing fin. Door panels with clear glass are interchangeable.

Attach the four nylon roller bearings [**H**] to the door panels as shown, using #8-32 x 3/8" hex head screws [**J**] centered in the outside slots in the top bearing fins.

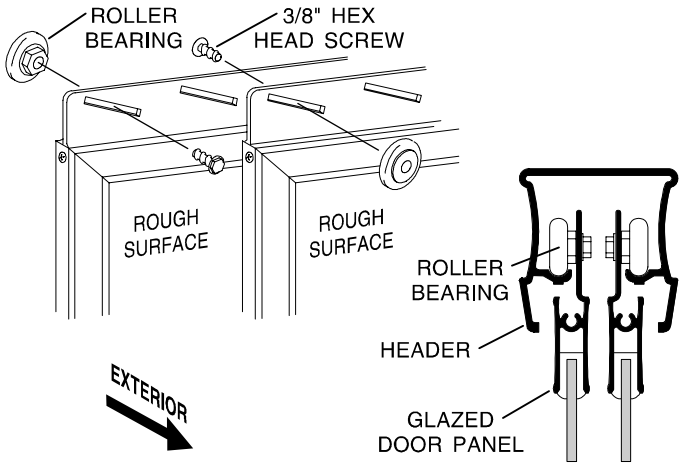

7

Lift the interior panel (with the rough surface closest to the top fin) into position with the rollers engaging the roller slot in the header [**F**].

Repeat for the exterior panel (rough surface away from the top fin).

If the door panels are not parallel to the wall jambs, remove them from the header and adjust the rollers up or down to compensate.

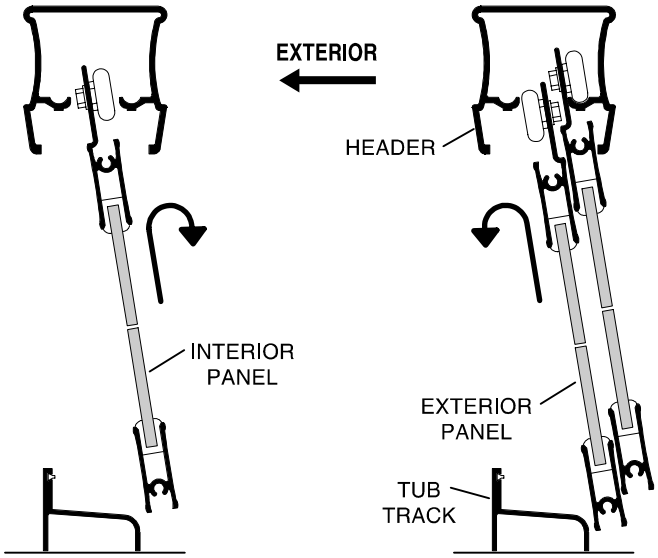

8

Before finishing the installation it is necessary to determine the proper closed position of the doors. For maximum water-proofing, position the interior panel closest to the shower head, as shown in the detail.

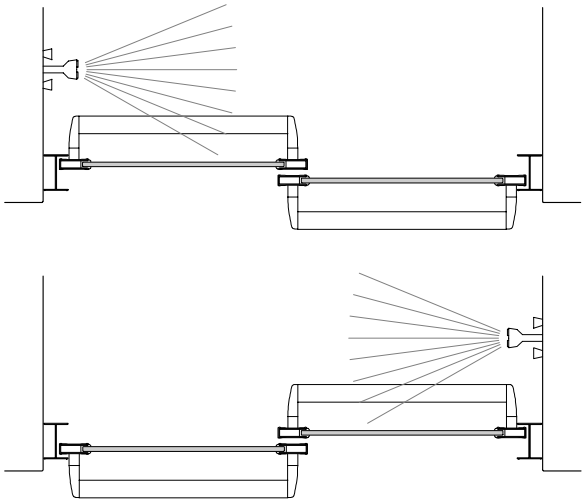

9

Slide the four towel bar trim rings [**K**] over the clear acrylic towel bar brackets [**L**] and press the brackets into the ends of the two towel bars [**M**].

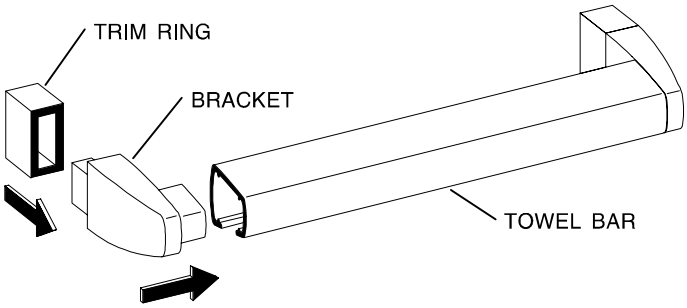

10

Attach a towel bar assembly (with the open slot in the bar downward) to the interior panel with a #10-24 x 7/8" truss head screw [**N**] thru the inner rail. Insert a #10-24 x 1 1/8" flat head screw [**P**] thru an acrylic finger pull [**R**], thru the outer rail and into the outer towel bar bracket. Peel the backing from a ALUMAX decal [**S**] press it into the recess in the acrylic finger pull.

Repeat for the exterior door panel.

NOTE: Do not overtighten the towel bar screws.

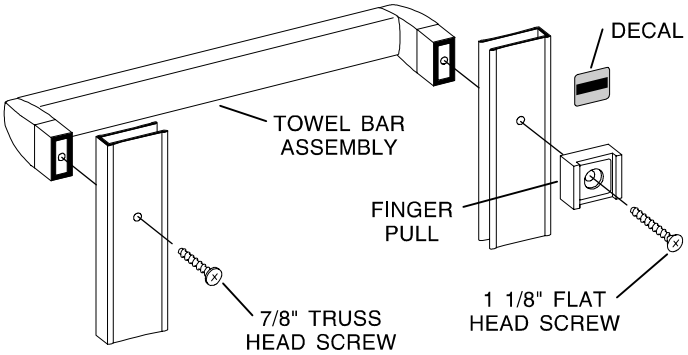

11

Locate the nylon bottom guide [**T**] in the middle of the tub track [**A**] with the door panels in the position shown. With a 7/64" bit, drill a hole into the V-groove through the mounting hole in the bottom guide. Install the bottom guide with a #6 x 3/8" pan head screw [**U**] thru the drilled hole.

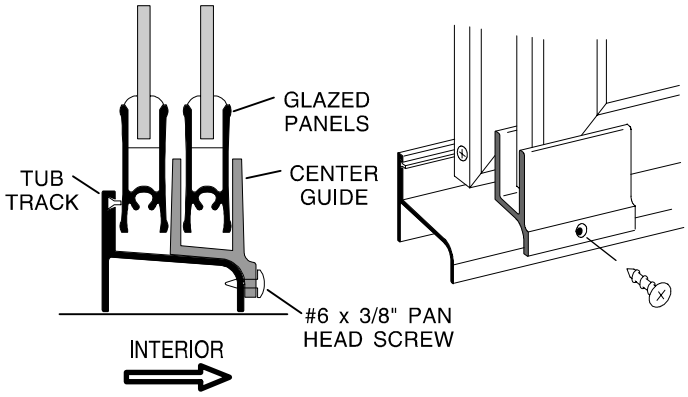

12

Slide the stainless steel bumper inserts [**V**] into the two soft vinyl jamb bumpers [**W**]. Align the slots in the bumpers with the outer rails of the door panels and snap the bumpers downward over the center wall jamb screws [**D**] with the nylon spacers [**E**] (see Step **#4**).

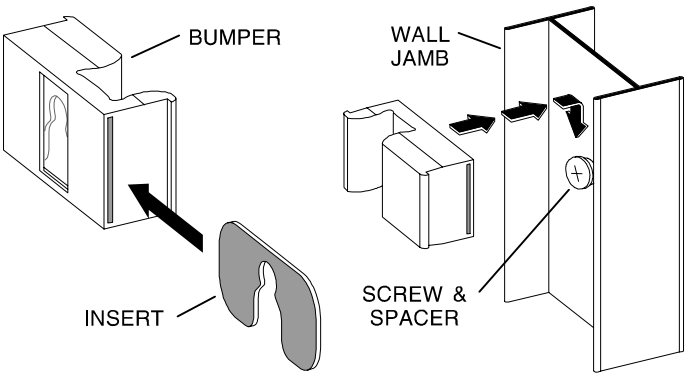

13

Caulk both ends of the tub track [**A**] where it meets the wall jambs [**B**] and the interior edge of the wall jambs as shown. Run a bead of caulking along the interior edge of the tub track.

NOTE: We recommend that you let the caulk cure for 24 hours before using your new enclosure.

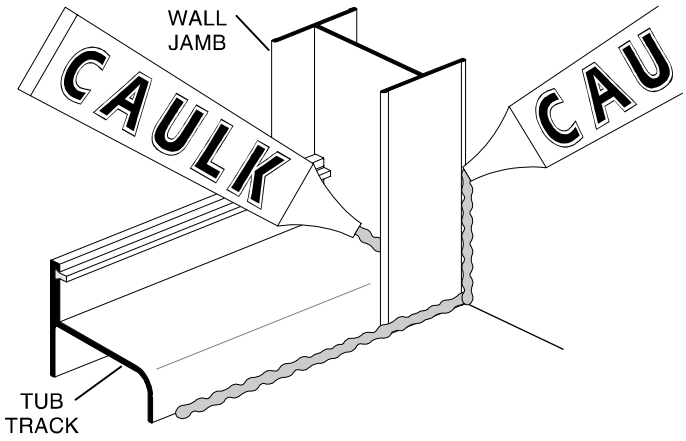

The Care and Cleaning of your new ALUMAX Bath Enclosure. The simplest and preferred method of cleaning your unit is by washing it with clean water and drying with a soft cloth. If soil is still present after drying, a non-abrasive cleanser with a pH of seven to eight may be used. Comet Bathroom Cleaner® has been tested and is recommended by the Bath Enclosure Manufacturers Association (BEMA). Do not use scouring pads, sharp instruments, or acid-based cleansers to clean the unit.

Thank you for choosing an ALUMAX Bath Enclosure. Please take a moment to complete and return the enclosed Customer Response Card. The information you provide helps us improve the quality of our products and provide better service to you, our customer.