ALUMAX
BATH ENCLOSURES

a product of Alcoa

Tel: 800-643-1514
Fax: 870-234-3181
www.alumaxbath.com

INSTALLATION
INSTRUCTIONS

791 SERIES STIKSTALL™ SHOWER ENCLOSURE

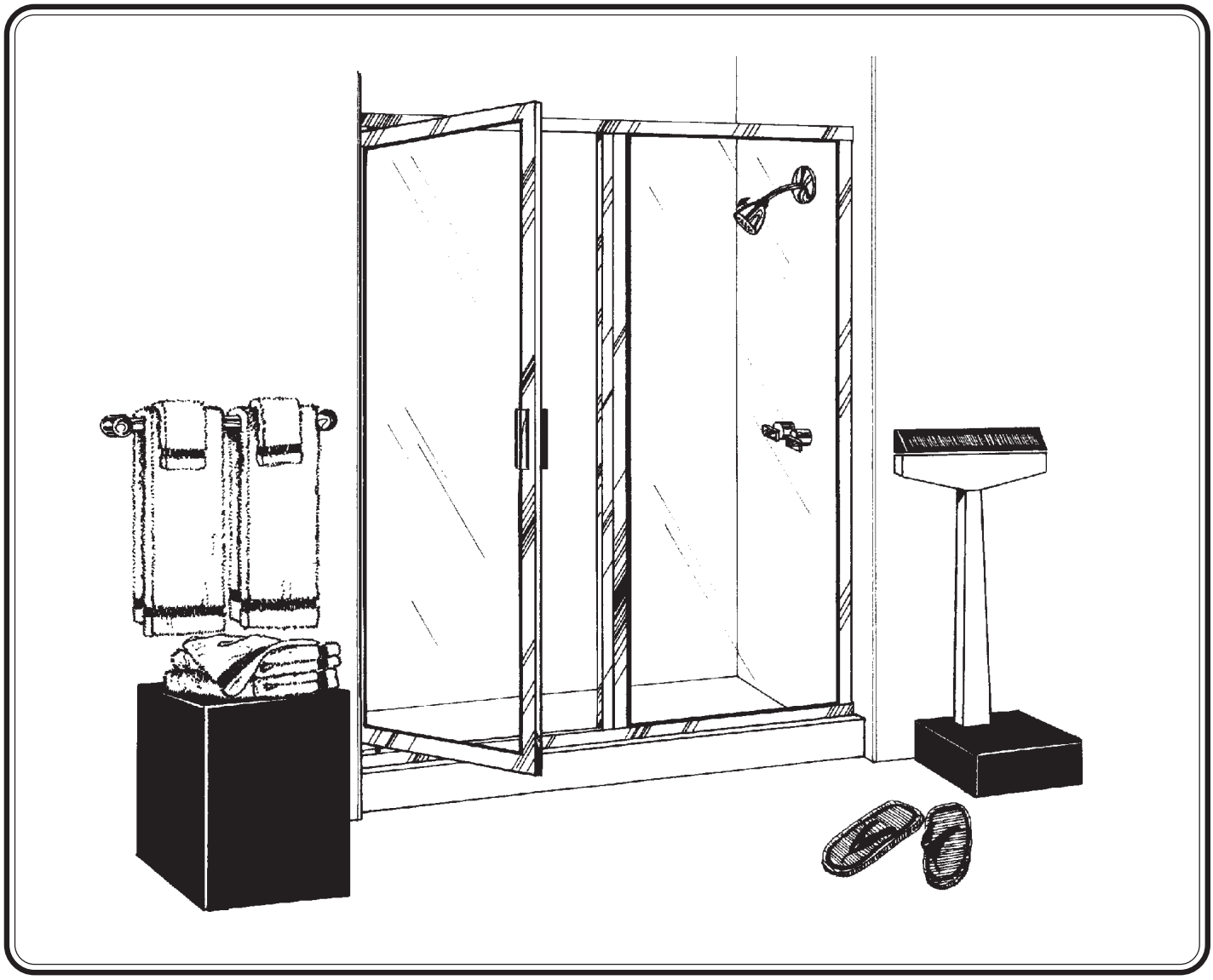

Copyright © Alumax Bath Enclosures 1997. All rights reserved.

G03711063
12-21-05

LIMITED WARRANTY AND REMEDY

ALUMAX BATH ENCLOSURES warrants to its dealers, customers, and all subsequent purchasers and users, that the products supplied by it shall be free from material defects in material and workmanship for a period of one (1) year after shipment, provided they are installed and maintained according to ALUMAX BATH ENCLOSURE's recommended practices and installation instructions. This warranty shall apply only to defects appearing within one (1) year from the date of shipment, and provided that ALUMAX BATH ENCLOSURES is promptly notified in writing of such defects. The sole and exclusive remedy with respect to the above warranty or with respect to any other claim relating to defects or any other condition or use of the products supplied by ALUMAX BATH ENCLOSURES, however caused, and whether such claim is based upon warranty contract, negligence, strict liability, or any other theory, is limited to repair or supply of such products, or repayment by ALUMAX BATH ENCLOSURES of the purchase price paid for it, at ALUMAX BATH ENCLOSURE's option.

ALUMAX BATH ENCLOSURES does not make any other representations or warranties, express or implied, including, but not limited to, any implied warranty of merchantability and any implied warranty of fitness for a particular purpose. In no event shall ALUMAX BATH ENCLOSURES be liable for special, direct, indirect, or consequential damages, including, but not limited to, loss or use of profits.

Dealers agree to pass on to its customers and users in writing ALUMAX BATH ENCLOSURE's Warranty and Remedy as set forth above.

Laws and building and safety codes governing the design and use of bath enclosures vary widely. ALUMAX BATH ENCLOSURES does not control the selection of product configurations, operating hardware or glazing materials, and assumes no responsibility therefor.

INSTALLATION NOTES

Unpack your unit carefully and inspect for freight damage. Lay out and identify all parts using the instruction sheets as a reference. Before discarding the carton, check for small hardware bags that tend to fall to the bottom of the box. If any parts are damaged or missing, refer to the descriptions noted in the instructions when contacting your dealer for replacements.

Handle the glass panels carefully and protect the edges. Safety tempered glass is very resistant to breakage, but it *can be broken* by banging the edges against a hard surface. The sharp corners of the panels can damage tile and floor surfaces, so do not remove any protective devices until you are ready to install the glass.

Please wear safety glasses whenever drilling or cutting. When drilling holes in ceramic tile or marble, use a center punch and hammer to carefully break the surface glaze so the drill can start without skidding.

To install your ALUMAX STIKSTALL Shower Enclosure you will need the following: tape measure, level, #2 Phillips screwdriver, drill, 1/8" and 3/16" drill bits, 3/16" wrench, hacksaw, mallet or hammer, wood block, razor or sharp knife, pencil, glass cleaner, and caulking (clear silicone recommended). Optional tools include a miter box for cutting parts to length, files, center punch and masking tape.

791 STIKSTALL PARTS LIST

A. 1 Curb (with weep slots)
B. 2 Wall Jambs
C. 6 Plastic Wall Anchors
D. 6 #8 x 1 1/2" Truss Head Screws
E. 2 Plastic Setting Blocks
F. 1 Fixed Glass Panel
G. 1 180° Post
H. 1 Header
J. 12 #8 x 1/4" Truss Head Screws
K. 2 Clear Vinyl Jamb Seals
L. 1 Glazed Door Panel
M. 1 Pivot Jamb
N. 1 Strike Jamb (Magnetic)
P. 2 Snap-in Fillers
R. 1 Drip Rail
S. 2 Drip Plugs
T. 1 Tapered Drip Vinyl
V. 1 Roll of Double Stick Tape
W. 2 #10 x 7/16" Sq. Head Set Screws
X. 1 Nylon Spacer
Y. 2 Nylon Pivot Bushings
AA. 1 Security Washer
BB. 1 Interior Door Handle
CC. 1 Exterior Door Handle
DD. 2 #6 x 1 1/4" Round Head Screws
EE. 4 Pcs. Vert. Glazing Vinyl (72")
FF. 2 Pcs. Horiz. Glazing Vinyl (72")

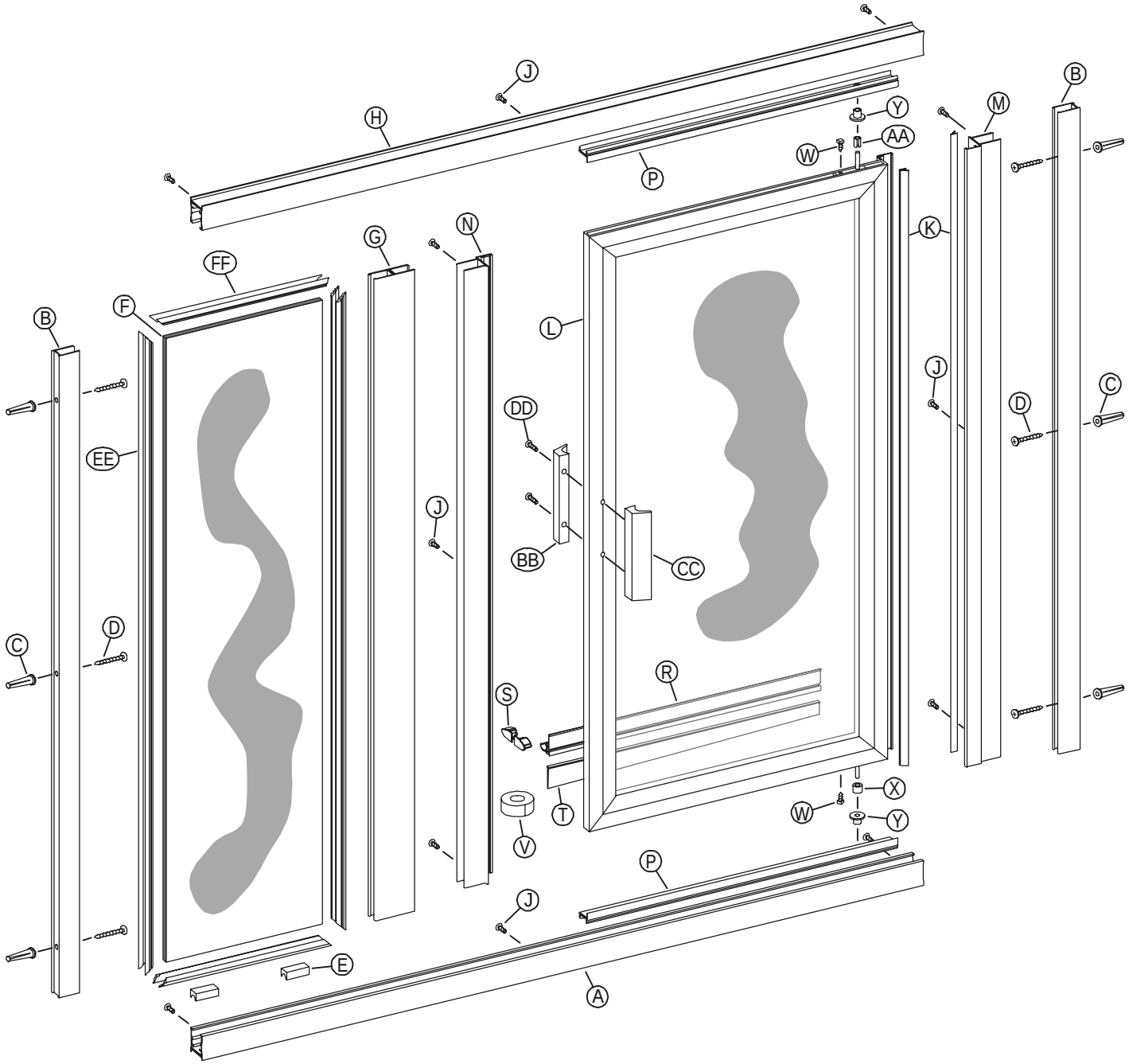

G03711063
12-21-05

The ALUMAX STIKSTALL framework has been designed to work with a variety of different door types. To ensure correct installation, this 791 Instruction Sheet is designed to be used by itself with a 790 Framed Pivot Door or with an instruction supplement packed with a 390 Frameless Pivot Door, or a 1090 Heavy Frameless Pivot Door.

Each step in this primary instruction sheet will indicate whether it applies to all door types or if a supplement should be used. If your door panel kit does not have an instruction supplement, then contact your dealer for the proper instructions. 790 door panel kits are covered in this instruction and therefore will not come with a separate instruction supplement.

1 - ALL DOORS

The ALUMAX 791 STIKSTALL Shower Enclosure is completely reversible and may be installed pivot-left or pivot-right (hinge-left or hinge-right). The door may pivot from the wall or from the center post. For maximum waterproofing, the pivot (or hinge) jamb should always be opposite the shower head. Using the diagram, determine the correct position for the door in your particular STIKSTALL installation. This instruction sheet depicts a pivot-right (hinge-right) installation.

NOTE: Fixed glass panel size should be determined by formulas shown on ALUMAX detail sheets.

CAUTION: For safety reasons, the door panel must always open *outward*.

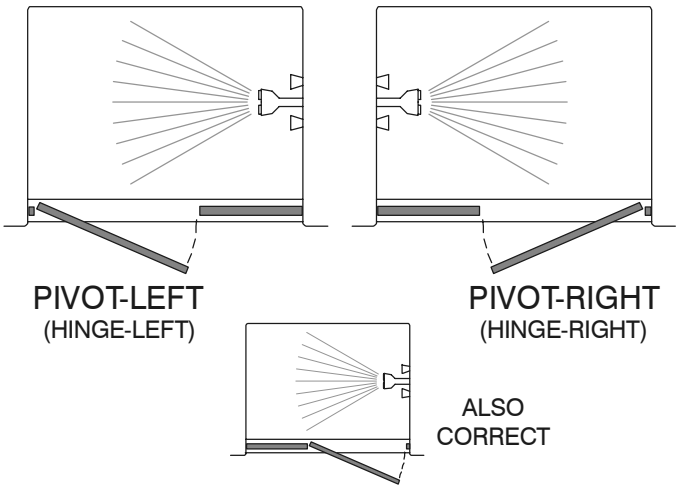

2 - ALL DOORS

Measure the opening at the bottom of the shower stall and cut the curb [**A**] (with weep slots) to fit the full width of the opening. If required, use a file to round the lower corners of the curb to fit the shower sill properly.

Using a 3/16" drill bit, drill the interior face of the curb on both ends as shown.

Position the curb in the middle of the sill with the weep slots to the interior and mark its position with a pencil line along the interior and exterior base.

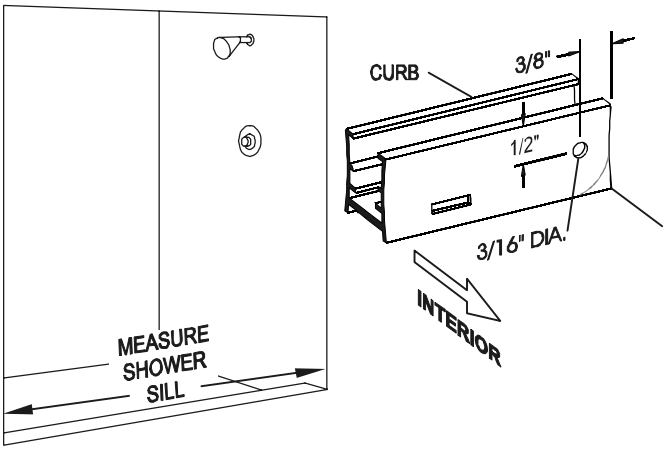

3 - ALL DOORS

Place the two wall jambs [**B**] into the ends of the curb [**A**]. Masking tape may be used to hold the curb in place during this operation. Plumb the jambs and mark the hole locations on the wall. Remove all parts and drill the walls for mounting hardware.

For tile or marble walls, drill six 3/16" diameter holes and insert the plastic wall anchors [**C**]. Attachments to fiberglass or acrylic units can be made in two ways. If a reinforcement is built into the wall of the unit, drill six 1/8" holes to install mounting screws directly into the reinforcement. If walls are not reinforced, drill six 3/16" holes and install plastic wall anchors or toggle bolts (toggle bolts not supplied by ALUMAX).

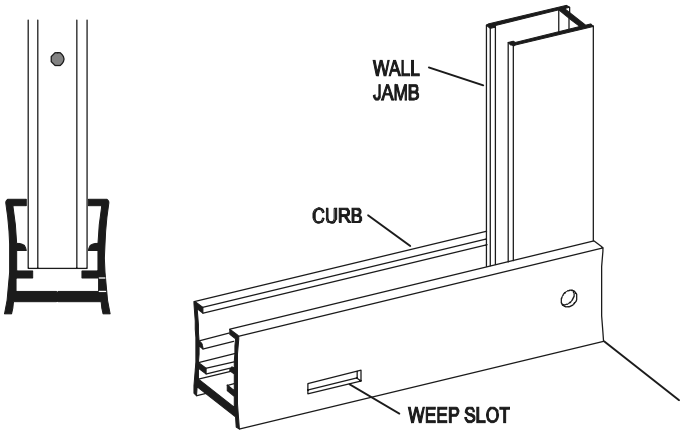

4 - ALL DOORS EXCEPT 1090

Wipe the shower walls and sill, curb [**A**] and wall jambs [**B**] with a clean, dry cloth to remove any dust or debris. Apply a 1/4" bead of caulk along the inside of both of the pencil lines marked in Step **#2**. Carefully replace the curb in the exact position marked. Caulk the inside of the curb ends where they meet the wall.

Replace both wall jambs and attach to the walls with six #8 x 1 1/2" truss head screws [**D**].

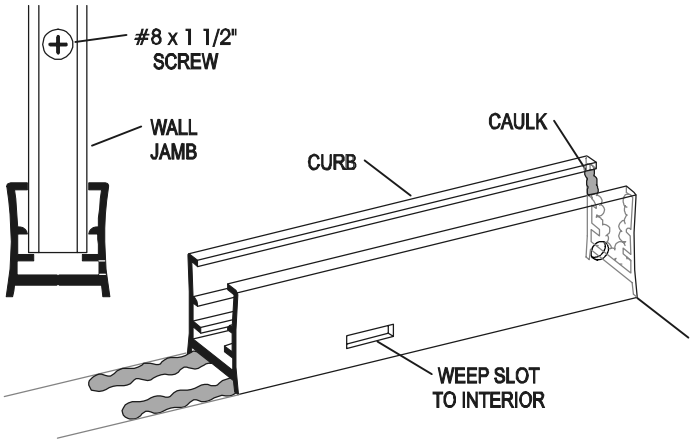

5 - ALL DOORS

Place the setting blocks [**E**] in the curb [**A**] as shown to support the fixed glass panel [**F**]. The setting blocks should be positioned approximately 3" from each corner of the glass panel. Remove any protective strips from the glass panel and set it into place on the setting blocks and approximately 1/2" into the wall jamb [**B**]. A strip of masking tape 1/2" from each vertical edge of the glass will aid alignment.

NOTE: Obscure glass panels should be installed with the rough surface of the glass to the exterior of the unit. Deco or etched glass panels should have the patterned surface to the inside.

Press the 180° post [**G**] into the curb and position it to overlap the glass panel by 1/2". Use masking tape to hold the post in position temporarily.

NOTE: To facilitate out of plumb walls, the 1/2" glass bite may be varied from 1/4" to 3/4".

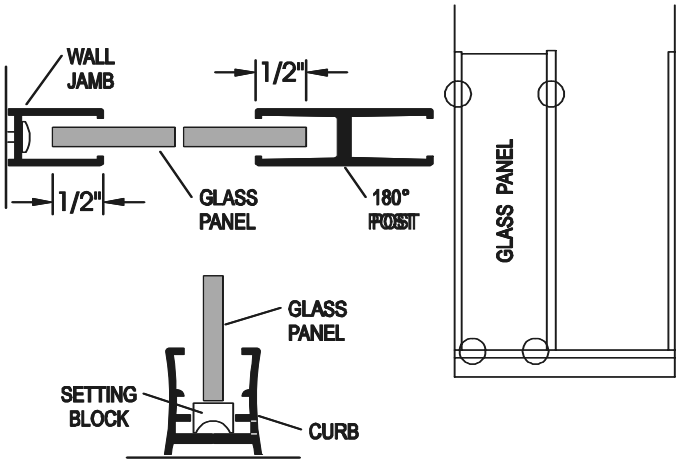

6 - ALL DOORS

Measure the wall-to-wall opening at the top of the wall jambs [**B**] and cut the header [**H**] to fit the exact opening. Using a 3/16" drill bit, drill the interior face of the header on both ends as shown.

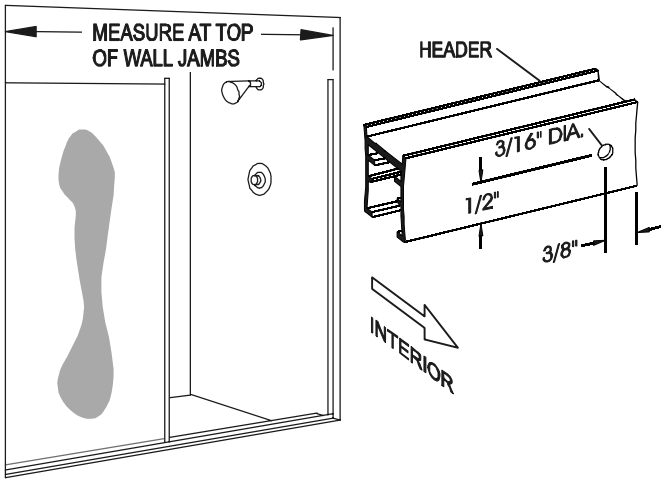

7 - ALL DOORS

Press the header [**H**] over the wall jambs [**B**] and the 180° post [**G**]. Plumb the post, moving it laterally as required to maintain proper coverage on the fixed glass panel [**F**]. The minimum horizontal dimension for the door opening is the door panel width (see the graphic in Step **#8**) plus 1/2", maximum is the door panel width plus 1 3/4". Using the holes in the ends of the header and curb as a guide, drill four 1/8" holes into the wall jambs. Drill two 1/8" holes thru the header and curb into the 180° post as shown, then enlarge the two outer holes with a 3/16" drill for clearance on the self-tapping screws. Secure the header and curb to the wall jambs and 180° post with six #8 x 1/4" truss head screws [**J**].

CAUTION: To prevent damage to the glass panel, drill the holes on the door side of the post.

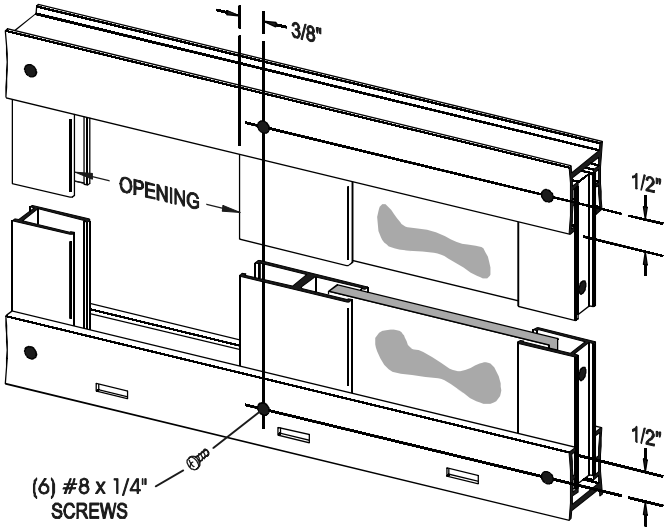

8 - 790 DOORS ONLY

Strip two clear vinyl jamb seals [**K**] into the door panel [**L**] splash guard and the pivot jamb [**M**] and trim flush at the ends. Both vinyls should be turned to trap water from the shower head. Secure the vinyls with a small quantity of glue or caulk at each end or by carefully crimping the vinyl pocket. Set the door panel aside.

Press the pivot jamb and strike jamb [**N**] (with magnetic strip) over the wall jamb [**B**] and 180° post [**G**]. Refer to Step #**1** for the proper handing of the door.

NOTE: The magnetic strip on the strike jamb must face the exterior and the clear vinyl jamb seal on the pivot jamb must face inward.

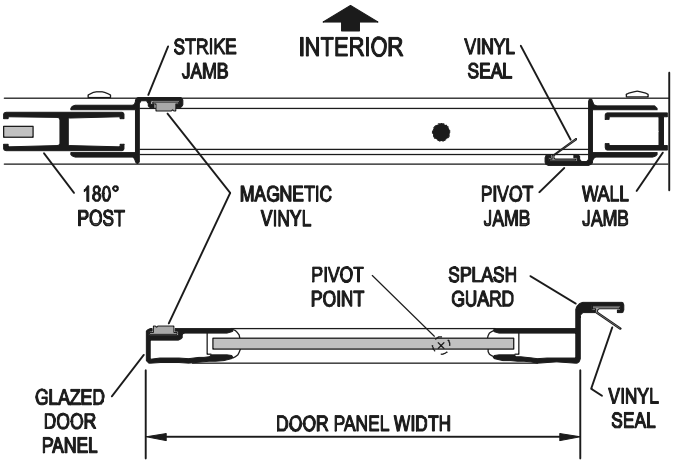

9 - 790 DOORS ONLY

Snap the fillers [**P**] into the curb [**A**] and header [**H**] between the door jambs with the raised lip to the exterior and the pivot holes toward the pivot jamb. Center the curb filler in the curb between the pivot and strike jamb (use masking tape to hold in position).

NOTE: The snap-in fillers should be exactly 3/8" longer than the door panel width.

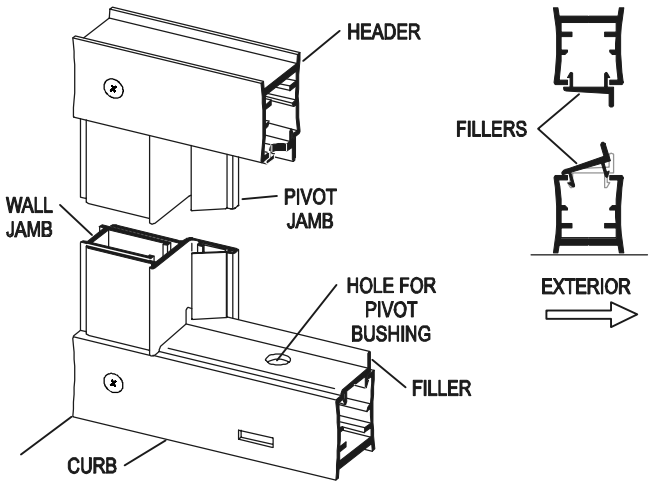

10 - 790 DOORS ONLY

Pull the bottom end of the pivot jamb [**M**] tight to the curb filler [**P**] and plumb the jamb. Drill two 1/8" holes thru the pivot jamb and into the wall jamb [**B**] 3/8" to 3/4" from the wall and approximately 1/4" vertically from the ends of the jamb. Drill a third hole centered between the first two and enlarge the outer holes with a 3/16" drill for clearance on the self-tapping screws. Attach the pivot jamb permanently with three #8 x 1/4" truss head screws [**J**].

Slide the header filler [**P**] tight against the pivot jamb. Push the strike jamb [**N**] tight against the fillers top and bottom. With the pivot jamb plumb and both fillers tight between the two door jambs, the strike jamb also will be plumb and parallel to the pivot jamb. Attach the strike jamb to the 180° post [**G**] in the same manner as the pivot jamb.

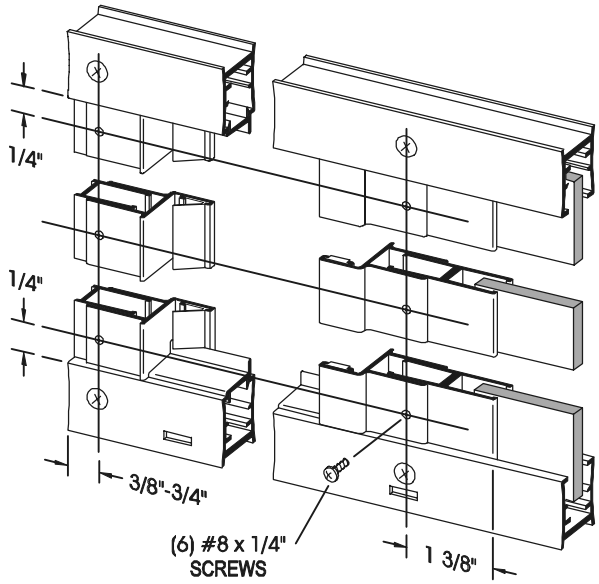

11 - 790 DOORS ONLY

Insert the two #10-24 x 7/16" square head set screws [**W**] into the threaded holes in the pivot blocks in the top and bottom rails of the glazed door panel [**L**]. Position the pivot pins 1 1/2" from the pivot side of the door (the side opposite the magnetic strip). Tighten the set screws just enough to prevent the pivot blocks from moving (finger tight plus a quarter turn). A 3/16" wrench (not supplied by ALUMAX) will fit the set screw heads.

Press the white nylon spacer [**X**] over the bottom pivot pin on the door panel.

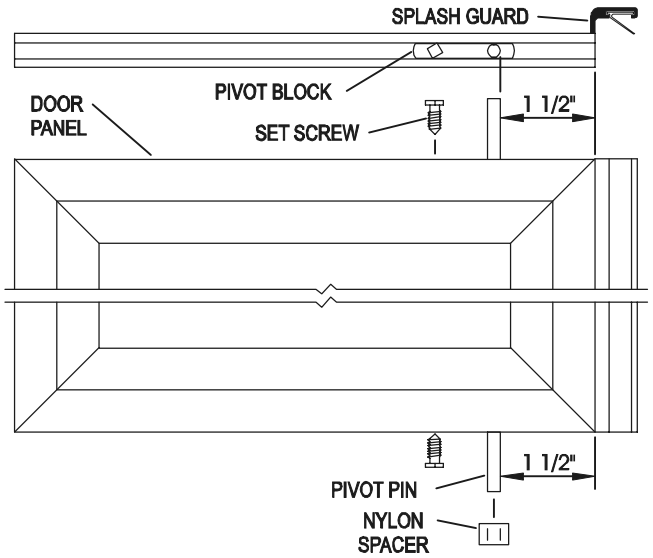

12 - 790 DOORS ONLY

Insert the two nylon pivot bushings [**Y**] into the pivot holes in the head and curb fillers [**P**].

Lift the door panel [**L**] and insert the top pivot pin into the pivot bushing in the header filler. Hold the door vertical and insert the bottom pivot pin into the pivot bushing in the curb filler. It may be necessary to remove the header retaining screws and raise the header slightly to install the door.

When the door has been set into place, snap the security washer [**AA**] over the top pivot pin to hold the upper pivot bushing in place and prevent accidental dislodging of the door.

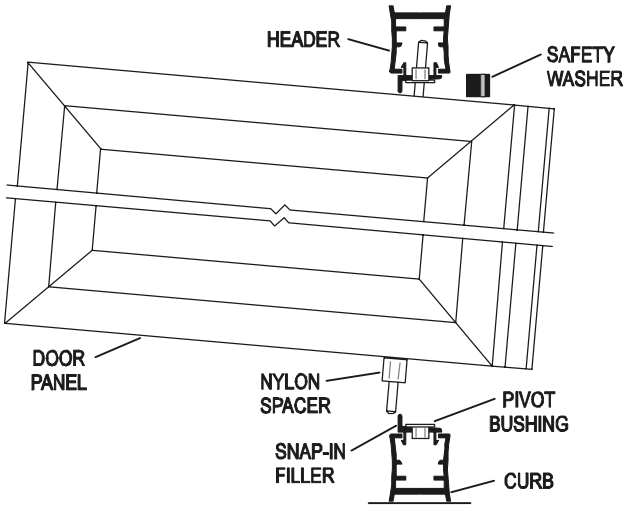

13 - 790 DOORS ONLY

Cut the drip rail [**R**] to the length of the bottom rail minus 11/16". Clean the bottom door rail and the drip rail thoroughly to ensure proper adhesion. Unroll the double stick tape [**V**] and carefully apply it to the back of the drip rail (do not peel the tape backing yet).

Insert the tapered drip vinyl [**T**] into the drip rail. Position the drip rail flush with the bottom and pivot side of the door panel [**L**], then raise the strike side until the bottom edge of the drip vinyl is parallel to the curb [**A**]. Mark the location of each end of the drip rail.

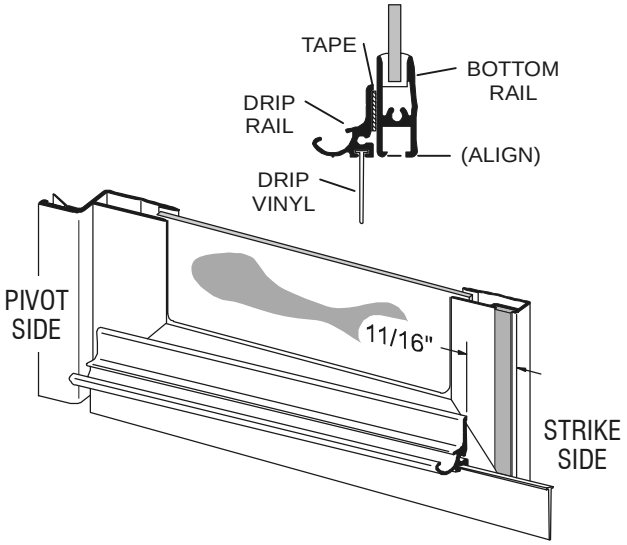

14 - 790 DOORS ONLY

Adjust the drip vinyl [**T**] by sliding it left or right until it just touches the curb. Trim the vinyl (flush with the pivot end and notch 1/4" longer than the drip rail as shown on the strike end).

The drip plug [**S**] is supplied with a left and right hand plug together. Break the right and left drip plug apart and insert the appropriate plug into the high (strike) side of the drip rail. Discard the unused drip plug. Peel off the tape backing and carefully press the drip rail [**R**] to the door in the marked position.

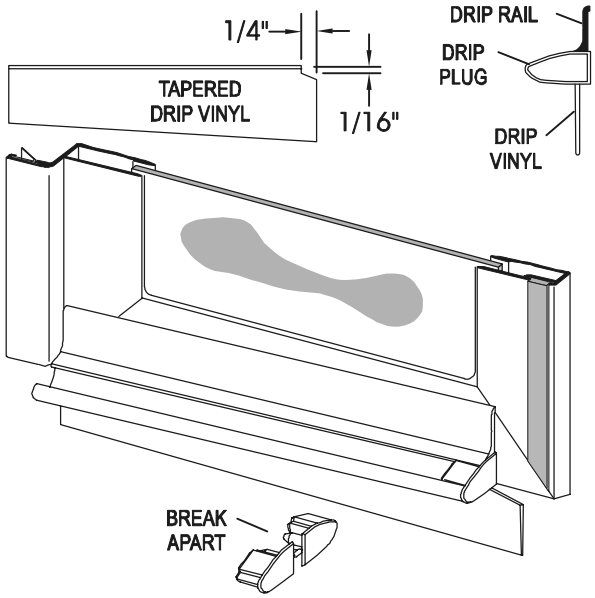

15 - 790 DOORS ONLY

Attach the interior door handle [**BB**] and the exterior door handle [**CC**] to the door panel [**L**] with two #6-32 x 1 1/4" round head screws [**DD**].

Close the door and check the clearance with the strike jamb [**N**]. If necessary, loosen the set screws [**W**] on the top and bottom slide bars and adjust the door panel to align the strike magnets. When the door panel is properly aligned, tighten the set screws securely.

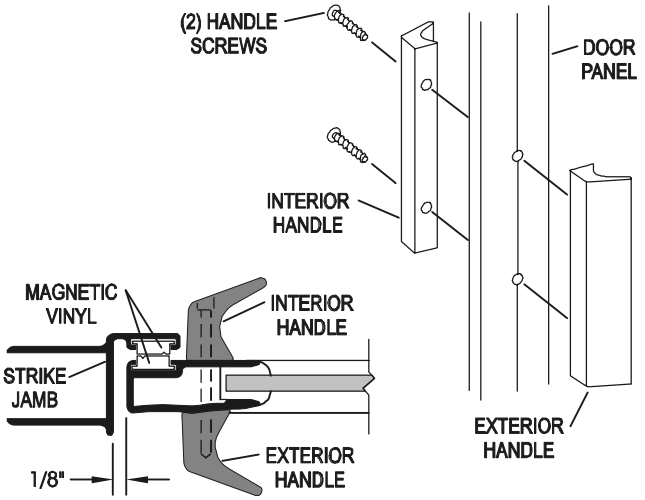

16 - ALL DOORS

Inspect the pieces of black glazing vinyl, and note the two different profiles. The smaller shape [**EE**] is installed vertically and the larger shape [**FF**] is installed horizontally. For structural strength and maximum water resistance, these vinyls are designed to fit tightly between the glass and framing. To speed installation, use glass cleaner for lubrication and a small block of wood to press the vinyl into place.

FIXED GLASS PANEL	VERTICAL	HORIZONTAL
1/4" GLASS REQUIRES:	V-219	V-220
3/16" GLASS REQUIRES:	V-226 NOTCH	V-225 NOTCH

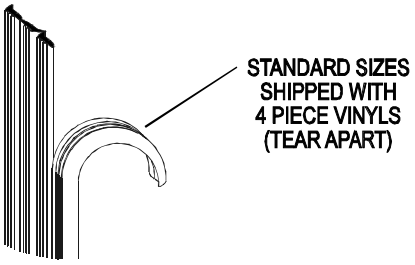

17 - ALL DOORS

Cut four pieces of the smaller vinyl [**EE**] 1" longer than the vertical opening (to prevent gapping from shrinkage) and trim the ends on a 45° angle. Using the masking tape guides, center the glass panel [**F**] in the frame. Cut four short (1" - 2") pieces of the small vinyl and press into both jambs on each side to hold the glass temporarily.

Take one of the long pieces of vinyl, and starting on the outside exterior jamb, press each end into the frame and work toward the middle. Be careful not to stretch the vinyl. Install the other three pieces in a similar fashion.

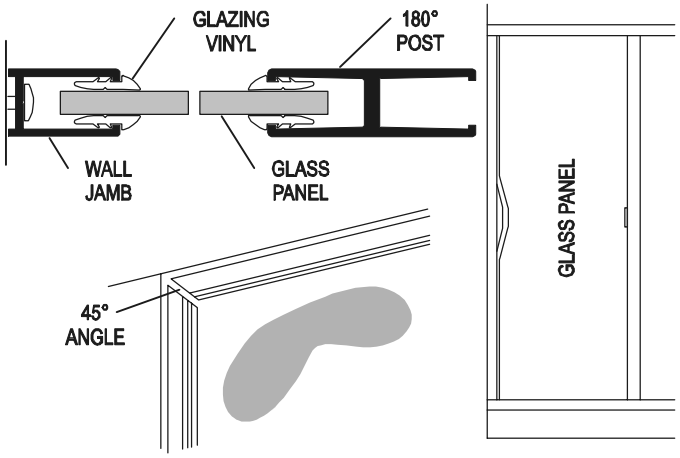

18 - ALL DOORS

Cut four pieces of the larger vinyl [**FF**] 1/2" longer than the horizontal opening and trim the ends on a 45° angle. Install the top exterior vinyl starting at both ends and working toward the middle. Be careful not to stretch the vinyl.

Install the top interior vinyl and the two bottom vinyls in the same way.

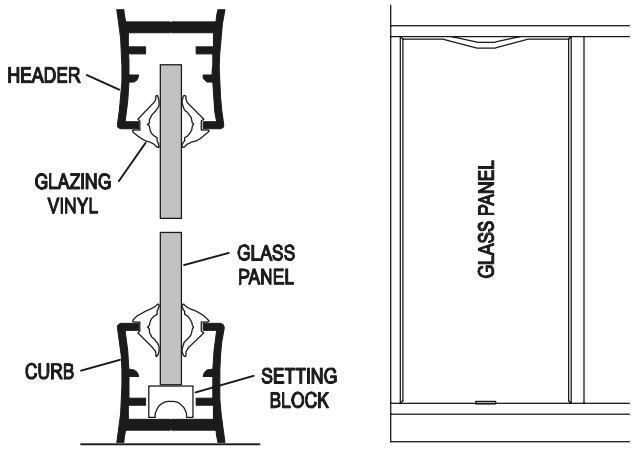

19 - ALL DOORS

Carefully caulk the interior jamb-to-wall and curb-to-base joints. For appearance, you may wish to caulk the exterior joints as well. We recommend you wait twenty-four hours before the first shower to allow the caulking to cure properly.

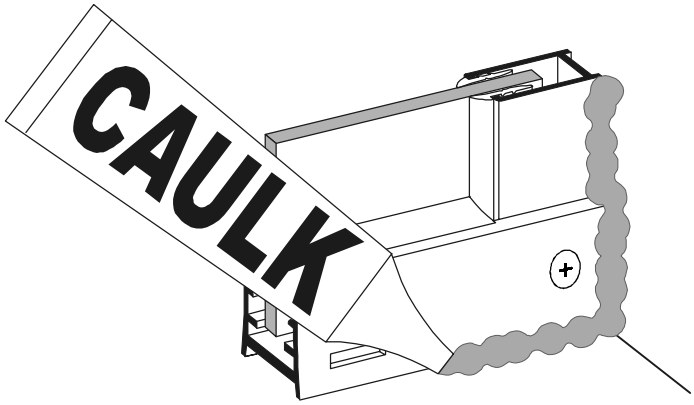

To keep your Alumax Bath Enclosure looking like new we recommend the Alumax ShowerBright Consumer Maintenance Kit. The Consumer Maintenance Kit surface should be applied every 45 to 60 days. To purchase or for more information contact your dealer. Our dealers have the materials to do a professional ShowerBright restoration. For best results professional restorations should be performed a maximum of once every three months. Contact your dealer for more information. New units with factory supplied ShowerBright coating have a limited lifetime warranty. For daily cleaning the simplest and preferred method is to wash the unit with clean water and dry with a soft cloth. Do not use scouring pads, sharp instruments, or acid-based cleansers to clean the unit.

Consumer kits will be sold direct, consumers will need to go to dealers for professional restoration and new units can be purchased with the permanent coating. Consumer kit materials need to be applied every 45 to 60 days, pro materials to be applied once quarterly max and factory has limited lifetime.