ALUMAX
BATH ENCLOSURES
a product of Alcoa

PO Box 40, Magnolia, AR 71754-0040 (870) 234-4260

INSTALLATION
INSTRUCTIONS

793 SERIES STIKSTALL™ SHOWER ENCLOSURE

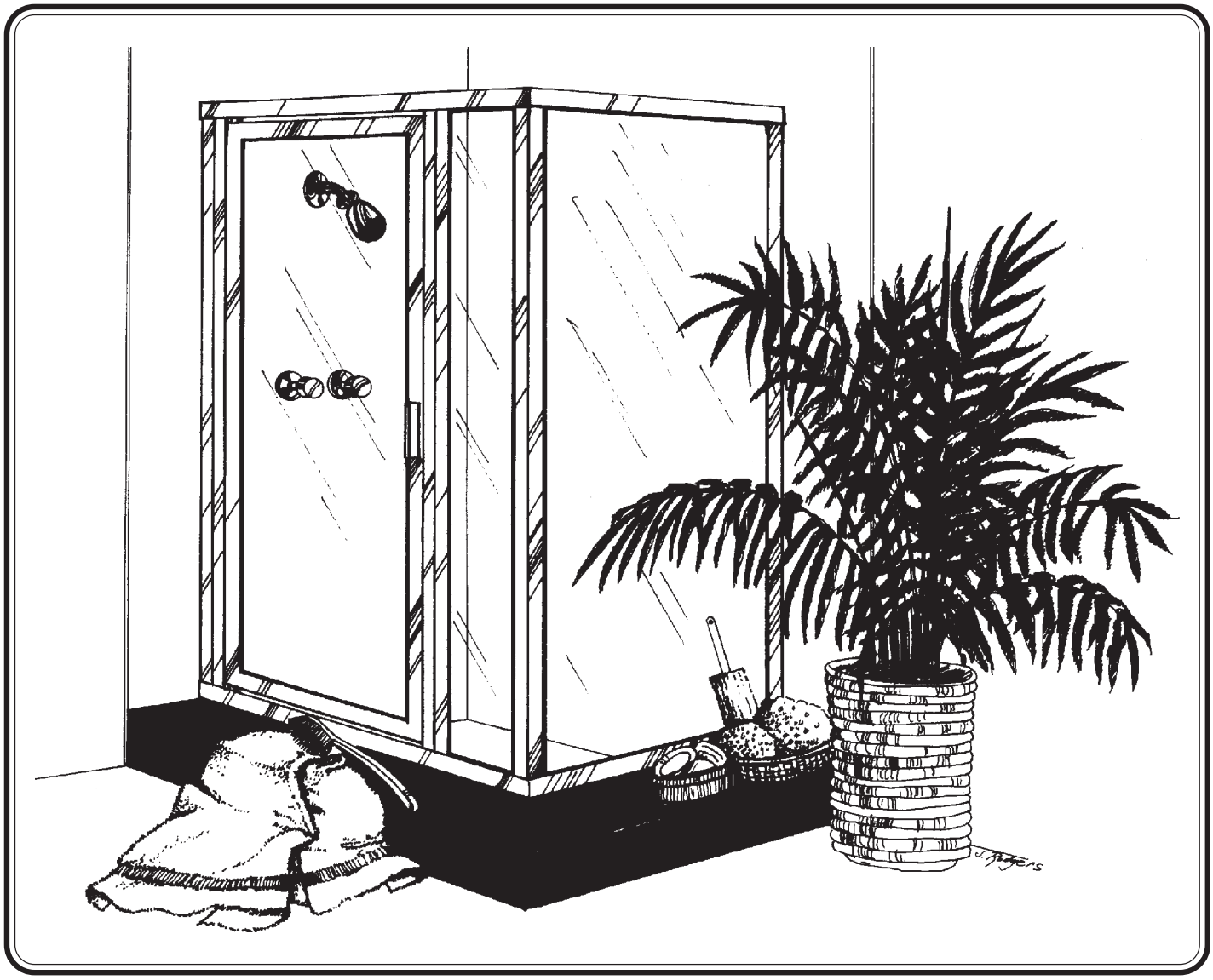

Copyright © Alumax Bath Enclosures 1997. All rights reserved.

EPH-N00-06019
1-26-00

LIMITED WARRANTY AND REMEDY

ALUMAX BATH ENCLOSURES warrants to its dealers, customers, and all subsequent purchasers and users, that the products supplied by it shall be free from material defects in material and workmanship for a period of one (1) year after shipment, provided they are installed and maintained according to ALUMAX BATH ENCLOSURE's recommended practices and installation instructions. This warranty shall apply only to defects appearing within one (1) year from the date of shipment, and provided that ALUMAX BATH ENCLOSURES is promptly notified in writing of such defects. The sole and exclusive remedy with respect to the above warranty or with respect to any other claim relating to defects or any other condition or use of the products supplied by ALUMAX BATH ENCLOSURES, however caused, and whether such claim is based upon warranty contract, negligence, strict liability, or any other theory, is limited to repair or supply of such products, or repayment by ALUMAX BATH ENCLOSURES of the purchase price paid for it, at ALUMAX BATH ENCLOSURE's option.

ALUMAX BATH ENCLOSURES does not make any other representations or warranties, express or implied, including, but not limited to, any implied warranty of merchantability and any implied warranty of fitness for a particular purpose. In no event shall ALUMAX BATH ENCLOSURES be liable for special, direct, indirect, or consequential damages, including, but not limited to, loss or use of profits.

Dealers agree to pass on to its customers and users in writing ALUMAX BATH ENCLOSURE's Warranty and Remedy as set forth above.

Laws and building and safety codes governing the design and use of bath enclosures vary widely. ALUMAX BATH ENCLOSURES does not control the selection of product configurations, operating hardware or glazing materials, and assumes no responsibility therefor.

INSTALLATION NOTES

Unpack your unit carefully and inspect for freight damage. Lay out and identify all parts using the instruction sheets as a reference. Before discarding the carton, check for small hardware bags that tend to fall to the bottom of the box. If any parts are damaged or missing, refer to the descriptions noted in the instructions when contacting your dealer for replacements.

Handle the glass panels carefully and protect the edges. Safety tempered glass is very resistant to breakage, but it *can be broken* by banging the edges against a hard surface. The sharp corners of the panels can damage tile and floor surfaces, so do not remove any protective devices until you are ready to install the glass.

Please wear safety glasses whenever drilling or cutting. When drilling holes in ceramic tile or marble, use a center punch and hammer to carefully break the surface glaze so the drill can start without skidding.

To install your ALUMAX STIKSTALL Shower Enclosure you will need the following: tape measure, level, #2 Phillips screwdriver, drill, 1/8" and 3/16" drill bits, 3/16" wrench, hacksaw, mallet or hammer, wood block, razor or sharp knife, pencil, glass cleaner, and caulking (clear silicone recommended). Optional tools include a miter box for cutting parts to length, files, center punch and masking tape.

793 STIKSTALL

PARTS LIST

A. 2 Curb Sections (with weep slots)
B. 2 90° Anchor Plates
C. 26 #8 x 1/4" Truss Head Screws
D. 2 Header Sections
E. 2 Wall Jambs
F. 6 Plastic Wall Anchors
G. 6 #8 x 1 1/2" Truss Head Screws
H. 4 Plastic Setting Blocks
J. 2 Fixed Glass Panels
K. 1 90° Post
L. 1 180° Post
M. 2 Clear Vinyl Jamb Seal
N. 1 Glazed Door Panel
P. 1 Pivot Jamb
R. 1 Strike Jamb (Magnetic)
S. 2 Snap-in Fillers
T. 1 Drip Rail
U. 2 Drip Plugs
V. 1 Tapered Drip Vinyl
X. 1 Roll Double Stick Tape
AA. 1 Nylon Spacer
BB. 2 Nylon Pivot Bushings
CC. 1 Security Washer
DD. 1 Interior Door Handle
EE. 1 Exterior Door Handle
FF. 2 #6 x 1 1/4" Round Head Screws
GG. 8 Pcs. Vert. Glazing Vinyl (72")
HH. 8 Pcs. Horiz. Glazing Vinyl (48")

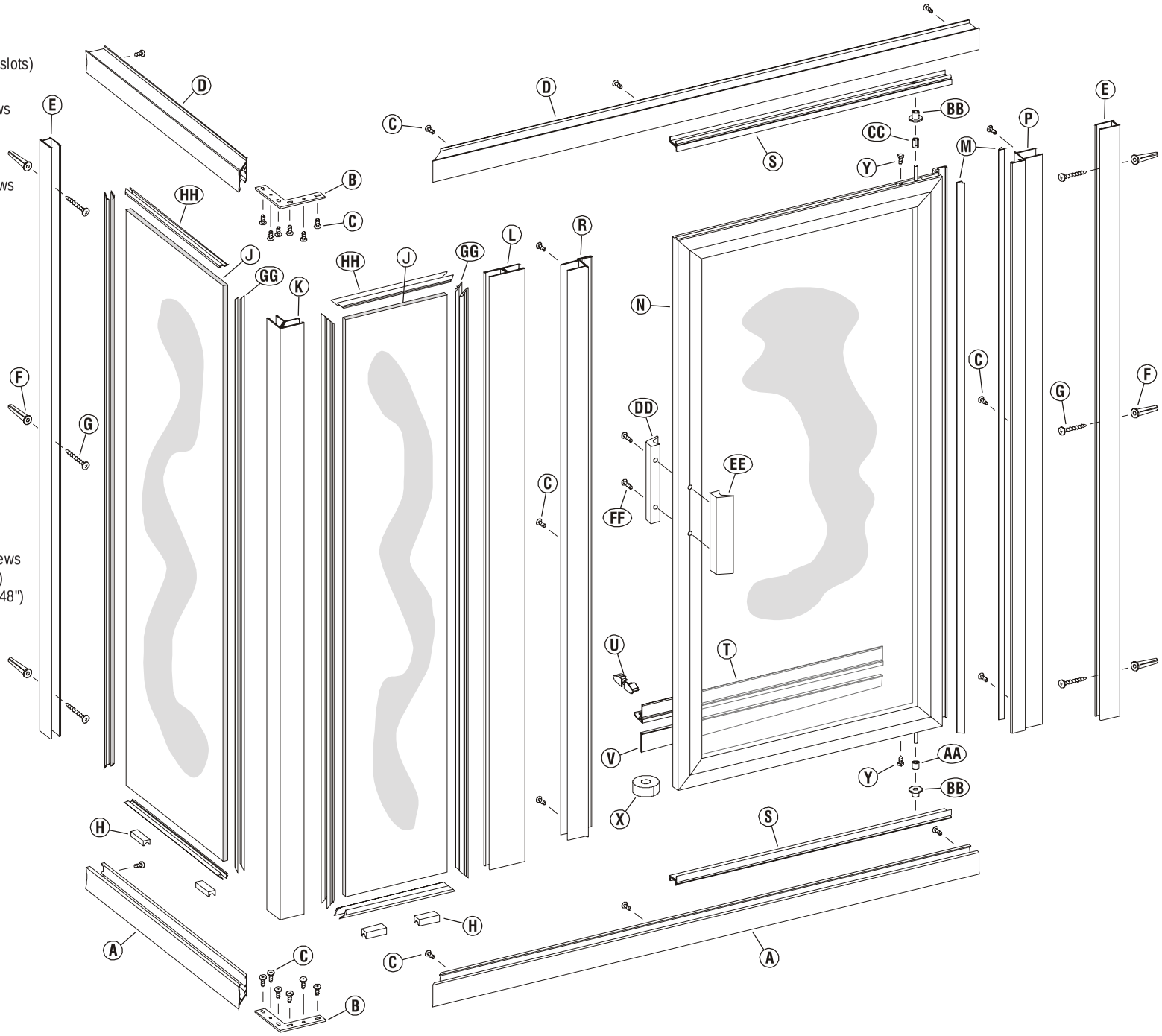

EPH-N00-06019
1-26-00

The ALUMAX STIKSTALL framework has been designed to work with a variety of different door types. To ensure correct installation, this 793 Instruction Sheet is designed to be used by itself with a 790 Framed Pivot Door or with an instruction supplement packed with a 390 Frameless Pivot Door, a 790i Intre-Hinge Door or a 1090 Heavy Frameless Pivot Door.

Each step in this primary instruction sheet will indicate whether it applies to all door types or if a supplement should be used. If your door panel kit does not have an instruction supplement, then contact your dealer for the proper instructions. 790 door panel kits are covered in this instruction, therefore will not come with a separate instruction supplement.

1 - ALL DOORS

The ALUMAX 793 STIKSTALL Shower Enclosure is completely reversible and may be installed pivot-left or pivot-right (hinge-left or hinge-right). The door may pivot from the wall or from the center post. Using the diagram, determine the correct position for the door in your particular STIKSTALL installation. This instruction sheet depicts a pivot-right (hinge-right) installation.

NOTE: Fixed glass panel size should be determined by formulas shown on ALUMAX detail sheets.

CAUTION: For safety reasons, the door panel must always open *outward*.

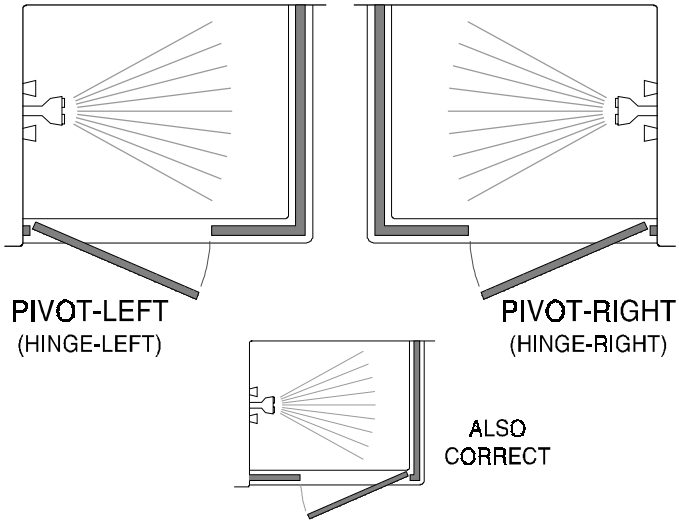

2 - ALL DOORS

Assemble the two curb sections [**A**] (with weep slots) by sliding a 90° anchor plate [**B**] into the mitered ends and forcing the sections together. The weep slots in the curb must be to the inside. Using the slotted holes in the anchor plate as a guide, drill matching 1/8" holes into the curbs. Secure the anchor plate to the curb with four #8 x 1/4" truss head screws [**C**]. As you tighten the screws, be sure the mitered ends are forced tightly together. To increase the rigidity of the mitered joint, drill and install two more screws through the round holes in the bracket.

Assemble the two header sections [**D**] in the same manner and set the assembly aside.

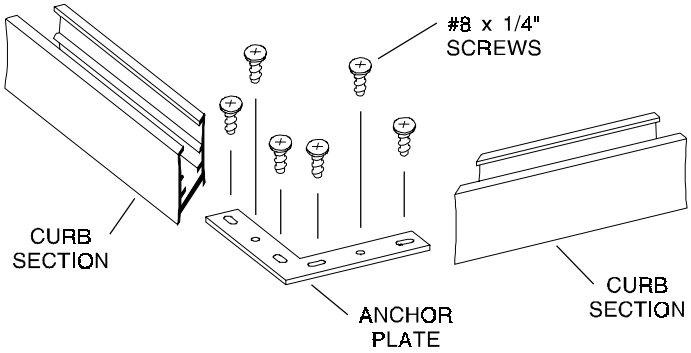

3 - ALL DOORS

Measure the opening at the bottom of the shower stall and trim the ends of the curb assembly [**A**] (with weep slots) to fit the shower sill. The curb should sit near the centerline of the sill. If required, use a file to round the lower ends of the curb assembly to fit the shower sill properly.

Using a 3/16" drill bit, drill the interior face of the curb assembly on both ends as shown.

Reposition the curb assembly on the shower sill and mark its position with a pencil line along the interior and exterior base.

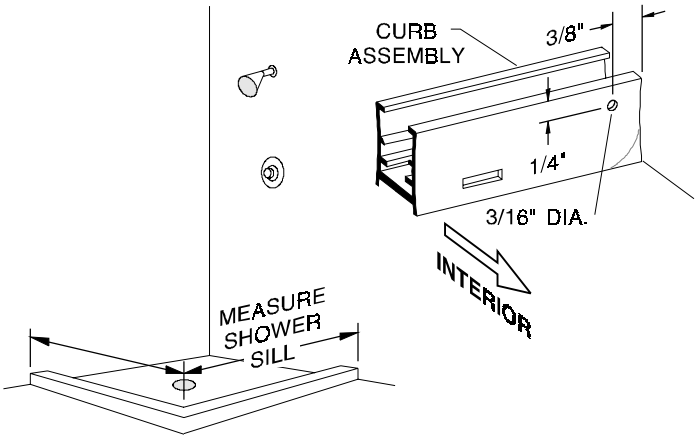

4 - ALL DOORS

Place the two wall jambs [**E**] into the ends of the curb assembly [**A**]. Masking tape may be used to hold the curb in place during this operation. Plumb the jambs and mark the hole locations on the wall. Remove all parts and drill the walls for mounting hardware.

For tile or marble walls, drill six 3/16" diameter holes and insert the plastic wall anchors [**F**]. Attachments to fiberglass or acrylic units can be made in two ways. If a reinforcement is built into the wall of the unit, drill six 1/8" holes to install mounting screws directly into the reinforcement. If walls are not reinforced, drill six 3/16" holes and install plastic wall anchors or toggle bolts (toggle bolts not supplied by ALUMAX).

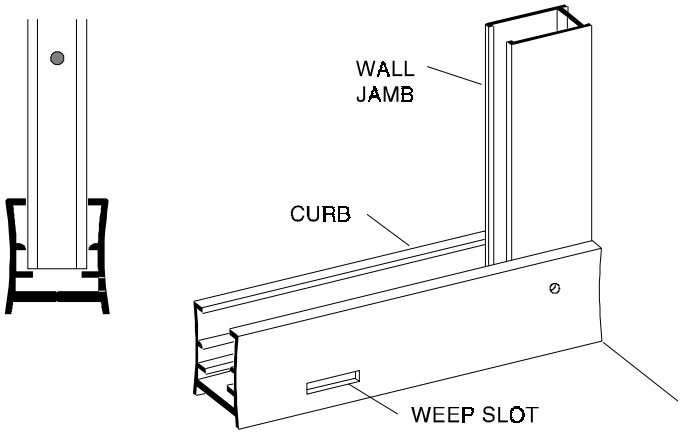

5 - ALL DOORS EXCEPT 1090

Wipe the shower walls and sill, curb assembly [**A**] and wall jambs [**E**] with a clean, dry cloth to remove any dust or debris. Apply a 1/4" bead of caulk along the inside of both of the pencil lines marked in Step **#3**. Carefully replace the curb in the exact position marked. Caulk the inside of the curb ends where they meet the wall. Caulk generously around the anchor plate [**B**], screws [**C**], and the inside of the mitered joint.

Replace both wall jambs and attach to the walls with six #8 x 1 1/2" truss head screws [**G**].

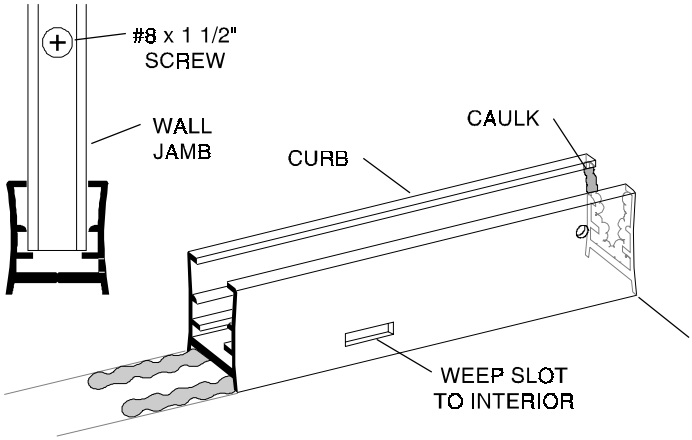

6 - ALL DOORS

Place the setting blocks [**H**] into the curb [**A**] as shown to support the fixed glass panels [**J**]. Locate the setting blocks 3" from the corners of the glass panels. Set the first glass panel into place on the setting blocks and approximately 1/2" into the wall jamb [**E**]. A strip of masking tape 1/2" from each vertical edge of the glass will aid alignment.

NOTE: Obscure glass panels should be installed with the rough surface of the glass to the exterior of the unit. Deco or etched glass panels should have the patterned surface to the inside.

Press the 90° post [**K**] into the curb assembly. It should overlap the glass panel by 1/2". Use masking tape to hold the post in position temporarily. Set the second glass panel into place, then press the 180° post [**L**] into the curb and secure with tape.

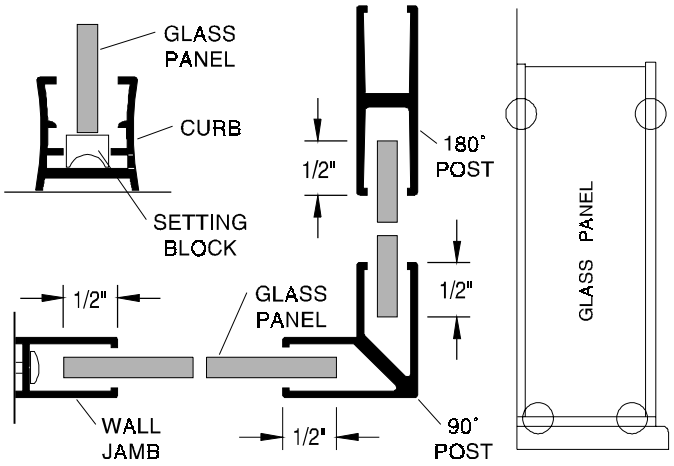

7 - ALL DOORS

Hold the 90° post [**K**] plumb and carefully measure horizontally from the top of each wall jamb [**E**] to the outside edge of the post. Add 3/16" to each measurement to find the corresponding dimension on the header assembly [**D**] (from the outside mitered edge to the squared ends) and trim the header assembly to fit.

NOTE: To facilitate out of plumb walls, the 1/2" glass bite may be varied from 1/4" to 3/4".

Using a 3/16" drill bit, drill the interior face of the header assembly on both ends as shown.

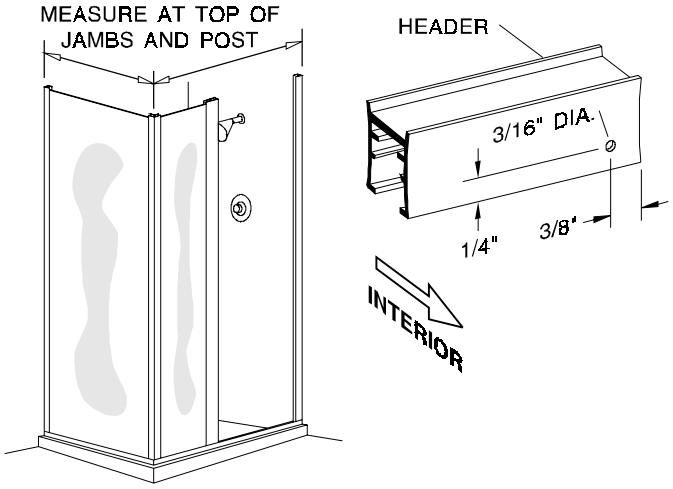

8 - ALL DOORS

Press the header assembly [**D**] over the wall jambs [**E**], 90° post [**K**] and the 180° post [**L**]. Check the posts for plumb. Adjust as required by varying the overlap of the header over the wall jambs. You may need to trim the ends of the header where it meets the wall. The minimum horizontal dimension for the door opening is the door panel width (see the graphic in Step **#9**) plus 3/4", maximum is the door panel width plus 1 3/4".

Using the holes in the ends of the header and curb as a guide, drill four 1/8" holes into the wall jambs. Drill four 1/8" holes thru the header and curb into the two posts as shown, then enlarge the four outer holes with a 3/16" drill for clearance on the self-tapping screws. Secure the header and curb to the wall jambs and posts with eight #8 x 1/4" truss head screws [**C**].

CAUTION: Slide the glass panels away from the jamb or post before drilling to prevent breakage.

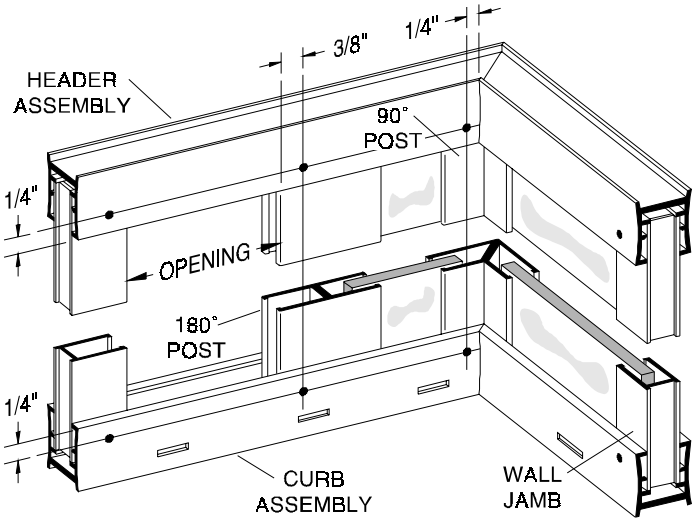

9 - 790 DOORS ONLY

Strip two clear vinyl jamb seals [**M**] into the door panel [**N**] splash guard and the pivot jamb [**P**] and trim flush at the ends. Both vinyls should be turned to trap water from the shower head. Secure the vinyls with a small quantity of glue or caulk at each end or by carefully crimping the vinyl pocket. Set the door panel aside.

Press the pivot jamb and strike jamb [**R**] (with magnetic strip) over the wall jamb [**E**] and 180° post [**L**]. Refer to Step **#1** for the proper handing of the door.

NOTE: The magnetic strip on the strike jamb must face the exterior and the clear vinyl jamb seal on the pivot jamb must face inward.

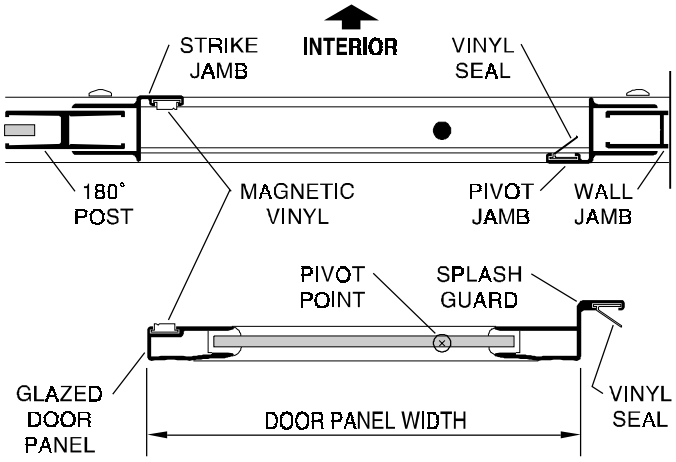

10 - 790 DOORS ONLY

Snap the fillers [**S**] into the curb assembly [**A**] and header assembly [**D**] between the door jambs with the raised lip to the exterior and the pivot holes toward the pivot jamb. Center the curb filler in the curb between the pivot and strike jamb (use masking tape to hold in position).

NOTE: The snap-in fillers should be exactly 3/8" longer than the door panel width.

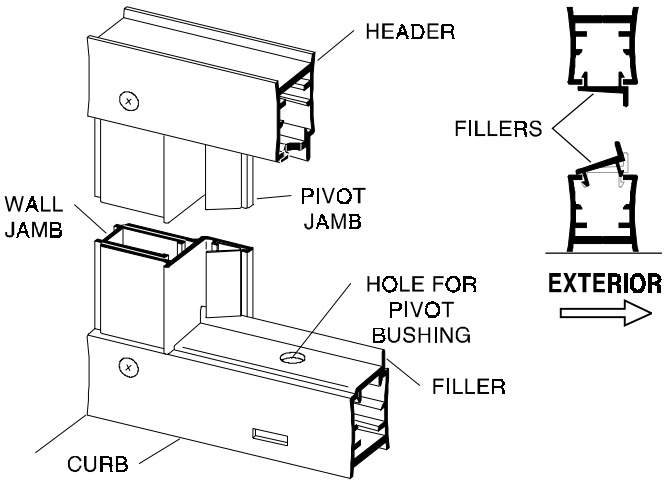

11 - 790 DOORS ONLY

Pull the bottom end of the pivot jamb [**P**] tight to the curb filler [**S**] and plumb the jamb. Drill two 1/8" holes thru the pivot jamb and into the wall jamb [**E**] 3/8" to 3/4" from the wall and approximately 1/4" vertically from the ends of the jamb. Drill a third hole centered between the first two and enlarge the outer holes with a 3/16" drill for clearance on the self-tapping screws. Attach the pivot jamb permanently with three #8 x 1/4" truss head screws [**C**].

Slide the header filler [**S**] tight against the pivot jamb. Push the strike jamb [**R**] tight against the fillers top and bottom. With the pivot jamb plumb and both fillers tight between the two door jambs, the strike jamb also will be plumb and parallel to the pivot jamb. Attach the strike jamb to the 180° post [**L**] in the same manner as the pivot jamb.

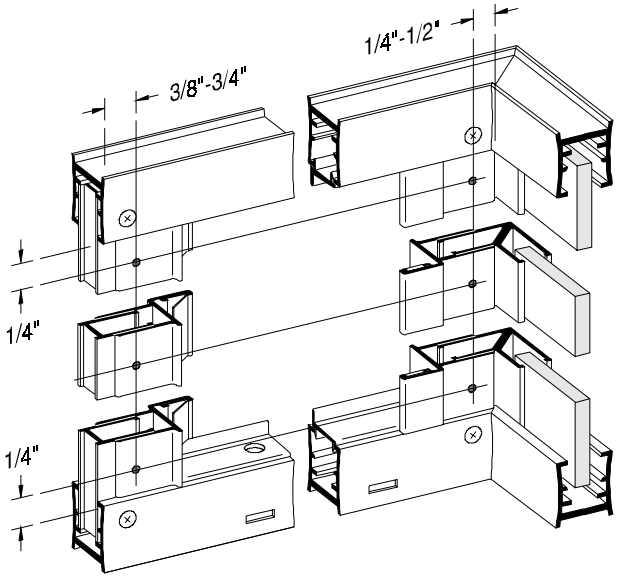

12 - 790 DOORS ONLY

Insert the two #10-24 x 7/16" square head set screws [**Y**] into the threaded holes in the pivot blocks in the top and bottom rails of the glazed door panel [**N**]. Position the pivot pins 1 1/2" from the pivot side of the door (the side opposite the magnetic strip). Tighten the set screws just enough to prevent the pivot blocks from moving (finger tight plus a quarter turn). A 3/16" wrench (not supplied by ALUMAX) will fit the set screw heads.

Press the white nylon spacer [**AA**] over the bottom pivot pin on the door panel.

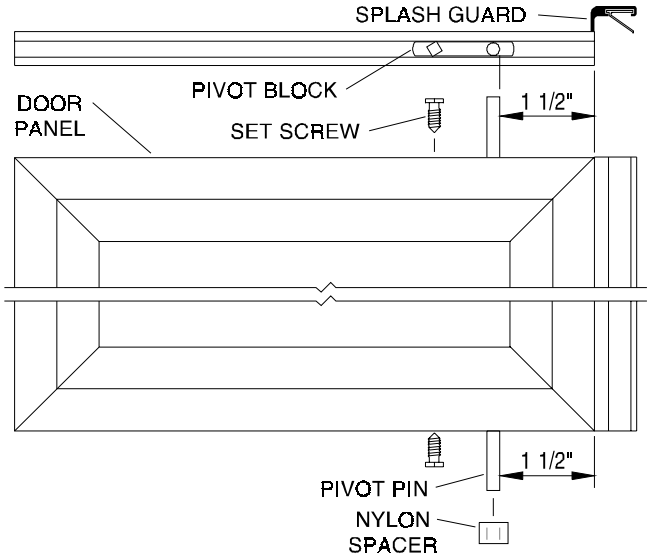

13 - 790 DOORS ONLY

Insert the two nylon pivot bushings [**BB**] into the pivot holes in the head and curb fillers [**S**].

Lift the door panel [**N**] and insert the top pivot pin into the pivot bushing in the header filler. Hold the door vertical and insert the bottom pivot pin into the pivot bushing in the curb filler. It may be necessary to remove the header retaining screws and raise the header slightly to install the door.

When the door has been set into place, snap the security washer [**CC**] over the top pivot pin to hold the upper pivot bushing in place and prevent accidental dislodging of the door.

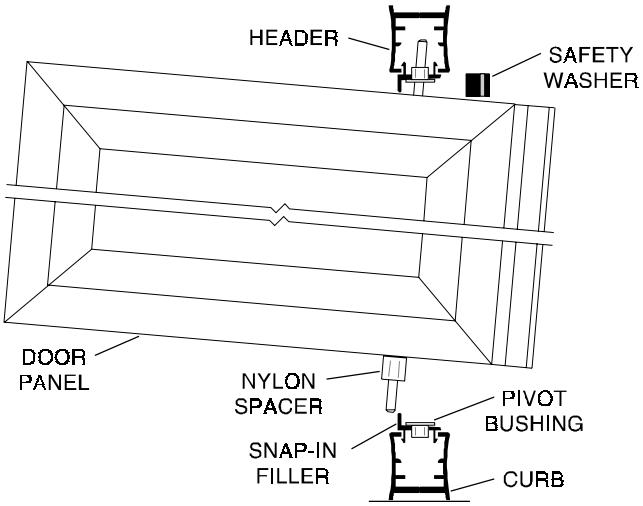

14 - 790 DOORS ONLY

Cut the drip rail [**T**] to the length of the bottom rail minus 11/16". Clean the bottom door rail and the drip rail thoroughly to ensure proper adhesion. Unroll the double stick tape [**X**] and carefully apply it to the back of the drip rail (do not peel the tape backing yet).

Insert the tapered drip vinyl [**V**] into the drip rail. Position the drip rail flush with the bottom and pivot side of the door panel [**N**], then raise the strike side until the bottom edge of the drip vinyl is parallel to the curb [**A**]. Mark the location of each end of the drip rail.

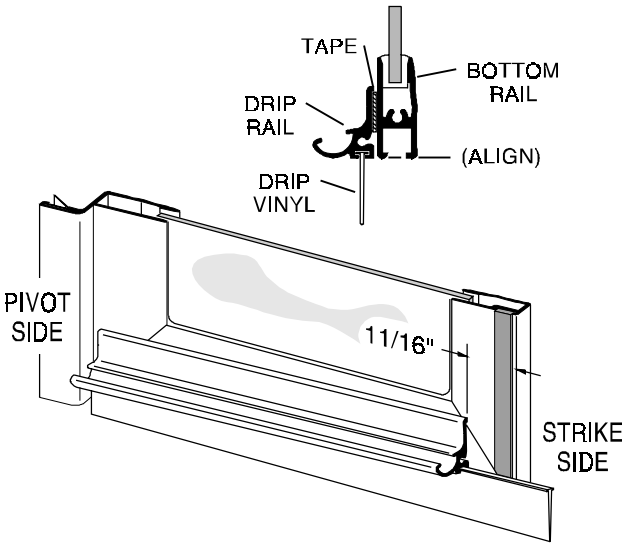

15 - 790 DOORS ONLY

Adjust the drip vinyl [**V**] by sliding it left or right until it just touches the curb. Trim the vinyl (flush with the pivot end and notch 1/4" longer than the drip rail as shown on the strike end).

The drip plug [**U**] is supplied with a left and right hand plug together. Break the right and left drip plug apart and insert the appropriate plug into the high (strike) side of the drip rail. Discard the unused drip plug. Peel off the tape backing and carefully press the drip rail [**T**] to the door in the marked position.

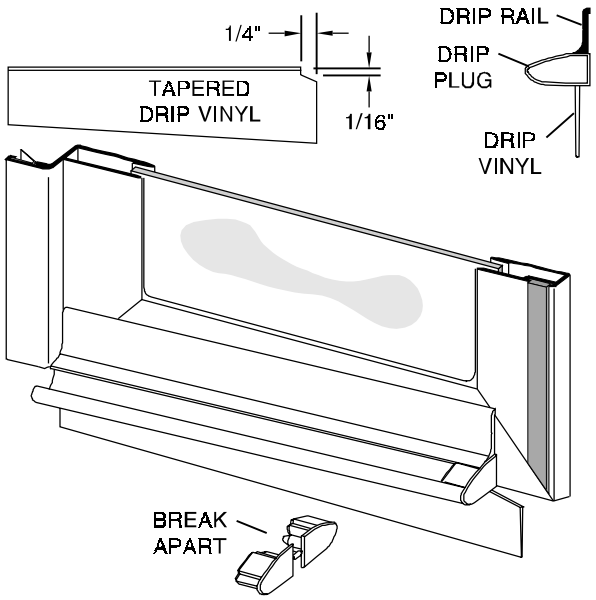

16 - 790 DOORS ONLY

Attach the interior door handle [**DD**] and the exterior door handle [**EE**] to the door panel [**N**] with two #6-32 x 1 1/4" round head screws [**FF**].

Close the door and check the clearance with the strike jamb [**R**]. If necessary, loosen the set screws [**Y**] on the top and bottom slide bars and adjust the door panel to align the strike magnets. When the door panel is properly aligned, tighten the set screws securely.

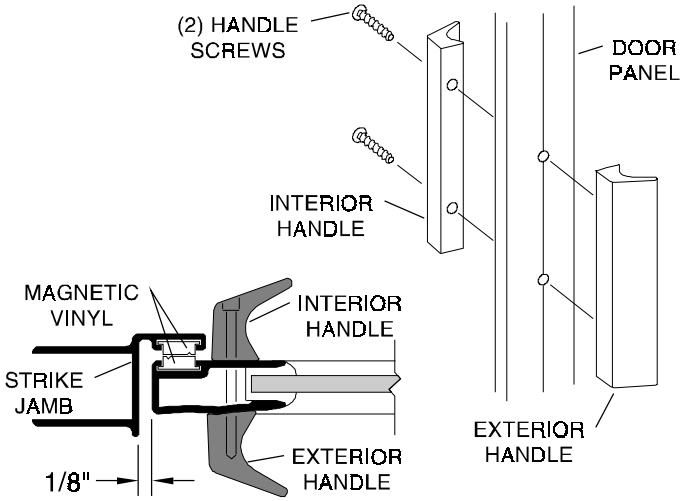

17 - ALL DOORS

Inspect the pieces of black glazing vinyl, and note the two different profiles. The smaller shape [**GG**] is installed vertically and the larger shape [**HH**] is installed horizontally. For structural strength and maximum water resistance, these vinyls are designed to fit tightly between the glass and framing. To speed installation, use glass cleaner for lubrication and a small block of wood to press the vinyl into place.

FIXED GLASS PANEL	VERTICAL	HORIZONTAL
1/4" GLASS REQUIRES:	V-219	V-220
3/16" GLASS REQUIRES:	V-226 NOTCH	V-225 NOTCH

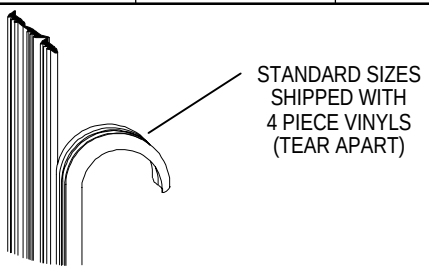

18 - ALL DOORS

Cut four pieces of the smaller vinyl [**GG**] 1" longer than the vertical opening (to prevent gapping from shrinkage) and trim the ends on a 45° angle. Using the masking tape guides, center the glass panel [**J**] in the frame. Cut four short (1" - 2") pieces of the small vinyl and press into both jambs on each side to hold the glass temporarily.

Take one of the long pieces of vinyl, and starting on the outside exterior jamb, press each end into the frame and work toward the middle. Be careful not to stretch the vinyl. Install the other three pieces in a similar fashion.

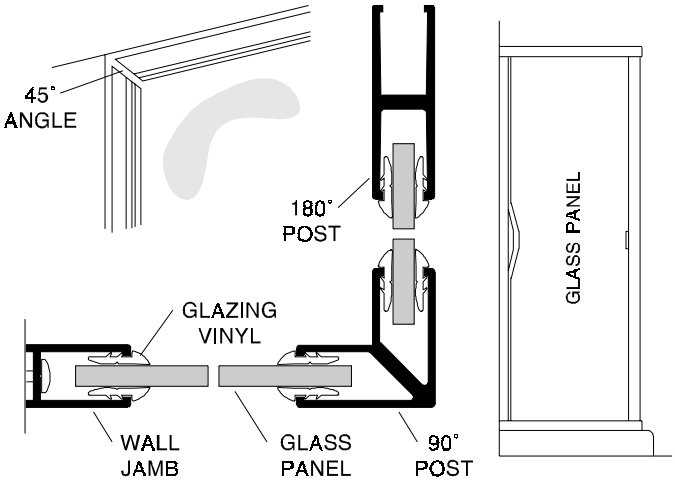

19 - ALL DOORS

Cut four pieces of the larger vinyl [**HH**] 1/2" longer than the horizontal opening and trim the ends on a 45° angle. Install the top exterior vinyl starting at both ends and working toward the middle. Be careful not to stretch the vinyl.

Install the top interior vinyl and the two bottom vinyls in the same way.

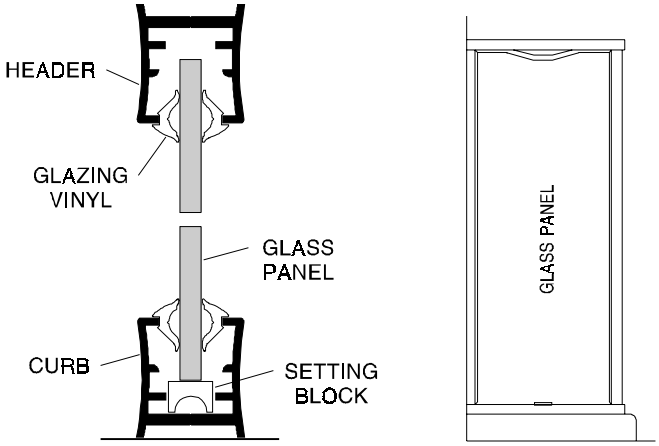

20 - ALL DOORS

Carefully caulk the interior jamb-to-wall and curb-to-base joints. For appearance, you may wish to caulk the exterior joints as well. We recommend you wait twenty-four hours before the first shower to allow the caulking to cure properly.

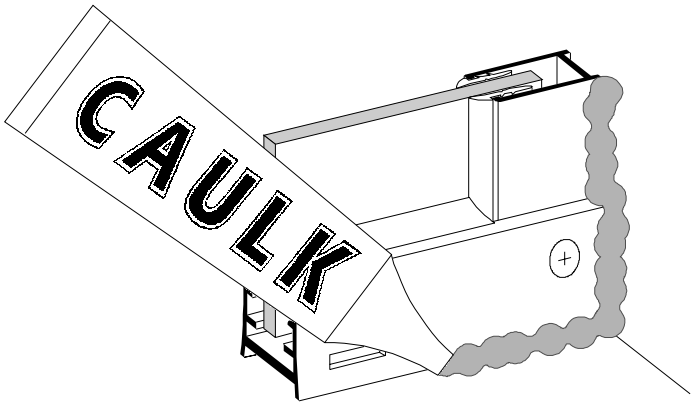

The Care and Cleaning of your new ALUMAX Bath Enclosure. The simplest and preferred method of cleaning your unit is by washing it with clean water and drying with a soft cloth. If soil is still present after drying, a non-abrasive cleanser with a pH of seven to eight may be used. Comet Bathroom Cleaner® has been tested and is recommended by the Bath Enclosure Manufacturers Association (BEMA). Do not use scouring pads, sharp instruments, or acid-based cleansers to clean the unit.

Thank you for choosing an ALUMAX Bath Enclosure. Please take a moment to complete and return the enclosed Customer Response Card. The information you provide helps us improve the quality of our products and provide better service to you, our customer.